This manual should be considered a permanent part of the motorcycle and should remain with the motorcycle when resold or otherwise transferred to a new owner or operator.
The manual contains important safety information and instructions which should be read carefully before operating the motorcycle.

⚠WARNING/⚠CAUTION/*NOTICE*/*NOTE*

Please read this manual and follow its instructions carefully. To emphasize special information, the symbol ⚠ and the words **WARNING**, **CAUTION**, ***NOTICE*** and *NOTE* have special meanings. Pay particular attention to messages highlighted by these signal words:

⚠ WARNING
Indicates a potential hazard that could result in death or serious injury.

⚠ CAUTION
Indicates a potential hazard that could result in minor or moderate injury.

NOTICE
Indicates a potential hazard that could result in vehicle or equipment damage.

NOTE:
Indicates special information to make maintenance easier or instructions clearer.

FOREWORD

This manual is presented as a means whereby you can maintain your RM-Z250 in top working condition at all times. Your riding skill and the maintenance steps outlined in this manual will assure you of top performance from your machine under any type of competition.

We sincerely wish you and your Suzuki motorcycle a successful partnership for many years of happy riding.

All information, illustrations, photographs and specifications contained in the manual are based on the latest product information available at the time of publication. Due to improvements or other changes, there may be some discrepancies in this manual. Suzuki reserves the right to make production changes at any time, without notice and without incurring any obligation to make the same or similar changes to motorcycle previous built or sold.

Suzuki Motor Corporation believes in conservation and protection of Earth's natural resources. To that end, we encourage every motorcycle owner to recycle, trade in, or properly dispose of, as appropriate, used motor oil, engine coolant, and other fluid, and tires.

SUZUKI MOTOR CORPORATION

GENERAL CONSIDERATIONS

- **Wear a helmet and goggles**
  A helmet is the most important piece of gear to wear. Helmets do not reduce essential vision or hearing. Generally, helmets do not cause or intensify injury if you crash. Helmets simply help your skull protect your intelligence, your memory, your personality, and your life.

  Your eyesight is equally valuable. Wearing suitable eye protection can help keep your vision unblurred by the wind and help shield your eyes from branches and airborne matter like bugs, dirt, or pebbles kicked up by tires. Wear a helmet and eye protection every time you ride.

- **Wear protective gear**
  Wear proper clothing when you ride. Avoid loose clothes or scarves, which could get caught in moving parts. Abrasion injuries can be minimized by wearing protective clothing including gloves, strong boots that fit over the ankle, long pants, and a long sleeve shirt or jackets. Experienced riders often wear a kidney belt and chest or back protector for additional comfort and protection.

- **Inspect your machine before riding**
  Before each use, perform an inspection per "Periodic Inspection" section starting on page 2-3.

- **No Passengers**
  Suzuki RM-Zs are designed for the rider only.

- **Practice on level ground**
  Before you begin riding, you should find a good place to practice the skills you need to ride safely. Find a flat, open area with enough space to maneuver. Check with your Suzuki dealer or call police department if you do not know where you can ride.

Review the controls on your motorcycle before riding.

- **Know your limits**
  Always ride within the boundaries of your own skills. Knowing these limits and staying within them will help you avoid accidents. Ride only in events appropriate for your experience.

  Safely competing on a motorcycle requires that your mental and physical skills are fully part of the experience. You should not attempt to operate a motorcycle, especially one with two wheels, if you are tired or under the influence of alcohol or other drugs. Alcohol, illegal drugs, and even some prescription and over-the-counter drugs and cause drowsiness, loss of coordination, loss of balance, and loss of good judgement. If you are tired or under the influence of alcohol or other drugs, PLEASE DO NOT RIDE your motorcycle.

- **Conclusion**
  The actions of other riders are unpredictable. Your motorcycle's condition can change. These factors can best be dealt with by giving every ride your full attention.

  Circumstances beyond your control could lead to an accident. You need to prepare for the unexpected by wearing a helmet and other protective gear, and practicing safe riding techniques to minimize the damage to you and your machine.

May all of your rides on your new Suzuki be winning rides!

LABELS

Read and follow all the labels on the motorcycle. Make sure you understand all of the labels. Do not remove any labels from the motorcycle.

SERIAL NUMBER LOCATION

The frame number ① is stamped on the steering head as shown in the illustration. The engine serial number ② is stamped on the right side of the crankcase assembly.
Write down the serial numbers here for your future reference.

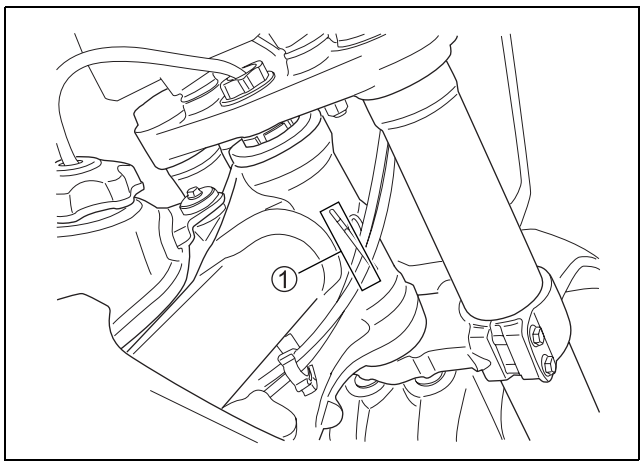

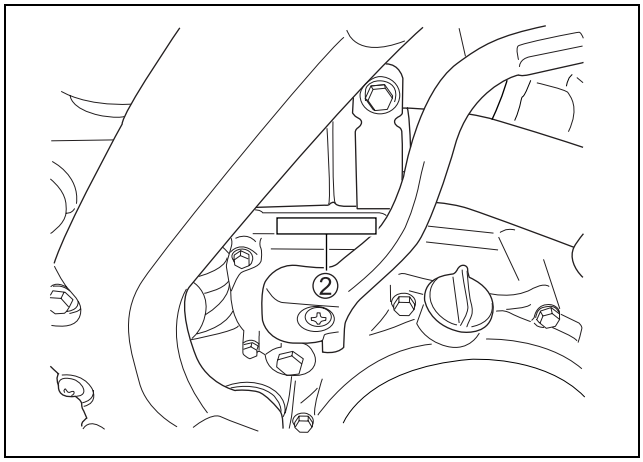

Frame No.	

Engine No.	

WARNINGS FOR SERVICING

⚠ WARNING

Never run the engine indoors or in a garage. Exhaust gas contains carbon monoxide, a gas that is colorless and odorless and can cause death or severe injury.

Only run the engine outdoors where there is fresh air.

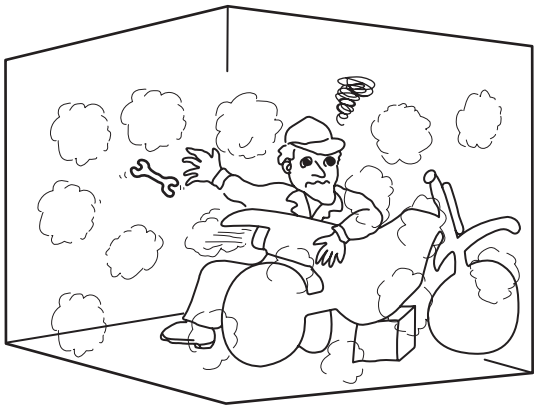

⚠ CAUTION

Hot engine and muffler can burn you.

Wait until the engine and muffler cools before servicing.

⚠ WARNING

Fuel can catch on fire if you do not handle it properly. Gasoline vapors can catch fire easily.

Do not smoke when servicing the machine. Do not service the machine in an area where there are open flames or sparks.

⚠ WARNING

Brake fluids and engine coolant can be hazardous to humans and pets. Brake fluid and engine coolant are harmful or fatal if swallowed, and harmful if it comes in contact with your skin or eyes.

Keep brake fluid and engine coolant away from children. Call your doctor immediately if swallowed, and induce vomiting. Flush eyes or skin with water if either brake fluid or engine coolant gets in eyes or comes in contact with skin.

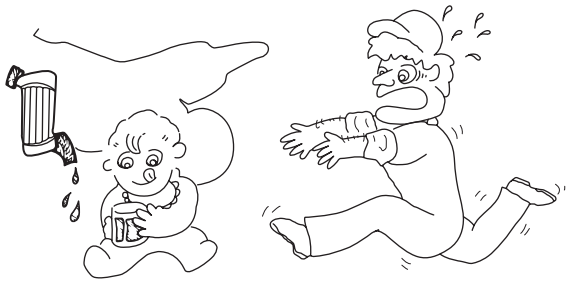

⚠ WARNING

Servicing the machine with engine running can be hazardous. You can be caught in the moving parts such as the drive chain, sprockets etc.

Be sure to stop the engine when servicing the machine.

⚠ WARNING

The strainer has a strong magnet. Magnetic force may affect pacemaker operation.

Do not perform the maintenance if you wear a pacemaker because this magnet has strong magnetic force.

PRECAUTIONS FOR SERVICING

⚠ WARNING

Servicing the machine without proper clothes and protective gear can be hazardous. You can be injured if you do not wear proper clothes and protective gear.

Be sure to wear proper clothes and shoes for servicing and wear protective glasses, mask or gloves as necessary.

NOTICE

Performing the maintenance improperly can cause damage to the parts or the motorcycle.

To prevent the parts or the motorcycle from damage, be sure to take the following precautions:

* **Replace gaskets, snap rings, circlips, O-rings and cotter pins with new ones.**
* **Take care not to expand the end gap larger than required to slip the circlip over the shaft when installing a circlip.**
* **Use special tools where specified.**
* **Use genuine SUZUKI parts and recommended oil.**
* **When two or more persons work together, pay attention to the safety of each other.**
* **After reassembly, inspect parts for tightness and operation.**

NOTICE

High pressure washers such as those found at coin-operated car washes have enough pressure to damage the parts of your motorcycle. It may cause rust, corrosion and increase wear. Parts cleaner can also damage motorcycle parts.

Do not use high pressure washers to clean your motorcycle. Do not use parts cleaner on throttle body and fuel injection sensors.

NOTE:

* *Clean a motorcycle from dirt and/or dust before servicing.*
* *Avoid spraying or allowing water to flow over the following places:*
  - *Spark plug*
  - *Fuel tank cap*
  - *Throttle body*
  - *Fuel injection system*
  - *Brake master cylinders*
  - *Air cleaner inlet*
  - *Throttle cable boots*
* *Be sure to dry the motorcycle after washing the motorcycle. Blow off water from parts by applying air blow if it is necessary to remove parts just after washing the motorcycle.*

NOTICE

Cleaning your motorcycle with any alkaline or strong acid cleaner, gasoline, brake fluid, or any other solvent will damage the motorcycle parts.

Clean only with soft cloth and warm water with mild detergent.

REPLACEMENT PARTS

NOTE:
Use of replacement parts which are not equivalent in quality to genuine SUZUKI parts can lead to performance problems and damage.

Use only genuine SUZUKI replacement parts or their equivalent. Genuine SUZUKI parts are high quality parts which are designed and built specially for SUZUKI motorcycle.

SYMBOL MARKS AND MATERIALS

Listed in the table below are the symbols indicating instructions and other information. The meaning of each symbol is also included in the table.

SYMBOL	DEFINITION	SYMBOL	DEFINITION
	Torque control required. Data beside it indicates specified torque.	1303B	Apply THREAD LOCK CEMENT “1303B” or equivalent. 99000-32030
OIL	Apply oil. Use engine oil or transmission oil unless otherwise specified.	1322D	Apply THREAD LOCK CEMENT “1322D” or equivalent. 99000-32150
M/O	Apply molybdenum oil solution. (Mixture of engine oil and SUZUKI MOLY PASTE in a ratio of 1:1)	1342H	Apply THREAD LOCK CEMENT “1342H” or equivalent. 99000-32160
A	Apply SUZUKI SUPER GREASE “A” or equivalent. 99000-25011	1360	Apply THREAD LOCK CEMENT “1360” or equivalent. 99000-32130
S	Apply SUZUKI SILICONE GREASE or equivalent. 99000-25100	FORK	Use KYB SUSPENSION OIL KHL15-11 or equivalent.
M	Apply SUZUKI MOLY PASTE or equivalent. 99000-25140	RS	Use REAR SUSPENSION OIL KHV10-K2C or equivalent.
W	Apply SUZUKI WATER RESISTANT GREASE EP2 or equivalent. 99000-25350	LLC	Use SUZUKI SUPER LONG LIFE COOLANT (BLUE). 99000-99032-20X
1215	Apply SUZUKI BOND “1215” or equivalent. 99000-31110		Use SUZUKI LONG LIFE COOLANT (GREEN) or equivalent. 99000-99032-12X
1207B	Apply SUZUKI BOND “1207B” or equivalent. 99000-31140		

SYMBOL	DEFINITION	SYMBOL	DEFINITION
BF	Apply or use brake fluid. (DOT 4)	TOOL	Use special tool.
V	Measure in voltage range.	DATA	Indication of service data.
Ω	Measure in resistance range.		Replace a part with a new one when reassembling.
	Measure in diode test range.		

ABBREVIATIONS USED IN THIS MANUAL

A

AC	: Alternating Current
API	: American Petroleum Institute

B

BTDC	: Before Top Dead Center
B+	: Battery Positive Voltage

C

CKP Sensor	: Crankshaft Position Sensor (CKPS)

D

DC	: Direct Current
DTC	: Diagnostic Trouble Code

E

ECM	: Engine Control Module, Engine Control Unit (ECU), (FI Control Unit)
ECT Sensor	: Engine Coolant Temperature Sensor (ECTS), Water Temp. Sensor (WTS)

F

FI	: Fuel Injection, Fuel Injector
FP	: Fuel Pump
FP Relay	: Fuel Pump Relay
FWD	: Forward

G

GND	: Ground
GP Switch	: Gear Position Switch

I

IAP Sensor	: Intake Air Pressure Sensor (IAPS), (MAP Sensor)
IAT Sensor	: Intake Air Temperature Sensor (IATS)

J

JASO	: Japanese Automobile Standards Organization

L

LH	: Left Hand

M

Max	: Maximum
Min	: Minimum

R

RH	: Right Hand

S

SAE	: Society of Automotive Engineers
STD	: Standard
S-HAC	: Suzuki Holeshot Assist Control

T

TO Sensor	: Tip-Over Sensor (TOS)
TP Sensor	: Throttle Position Sensor (TPS)

WIRE COLOR

B	: Black	Lg	: Light green
Bl	: Blue	O	: Orange
Br	: Brown	P	: Pink
Dg	: Dark green	R	: Red
G	: Green	Y	: Yellow
Gr	: Gray		

B/Bl	: Black with Blue tracer
B/Br	: Black with Brown tracer
B/W	: Black with White tracer
B/Y	: Black with Yellow tracer
Bl/B	: Blue with Black tracer
Bl/G	: Blue with Green tracer
Bl/R	: Blue with Red tracer
Bl/W	: Blue with White tracer
Bl/Y	: Blue with Yellow tracer
Br/W	: Brown with White tracer
G/B	: Green with Black tracer
G/W	: Green with White tracer
Gr/W	: Gray with White tracer
R/B	: Red with Black tracer
R/Bl	: Red with Blue tracer
W/Bl	: White with Blue tracer
W/G	: White with Green tracer
W/R	: White with Red tracer
Y/B	: Yellow with Black tracer
Y/R	: Yellow with Red tracer

GROUP INDEX

GENERAL INFORMATION

CONTENTS

COUNTRY AND AREA CODES

The following codes stand for the applicable country(-ies) and area(-s).

CODE	COUNTRY or AREA	EFFECTIVE FRAME NO.
000	Japan	JS1RJ42A0H0 500001 –
E-03	U. S. A.	JS1RJ42C H2 100001 –
E-19	E.U.	JS1RJ42A0H0 500001 –
E-28	Canada	JS1RJ42C H2 100001 –

LOCATION OF PARTS

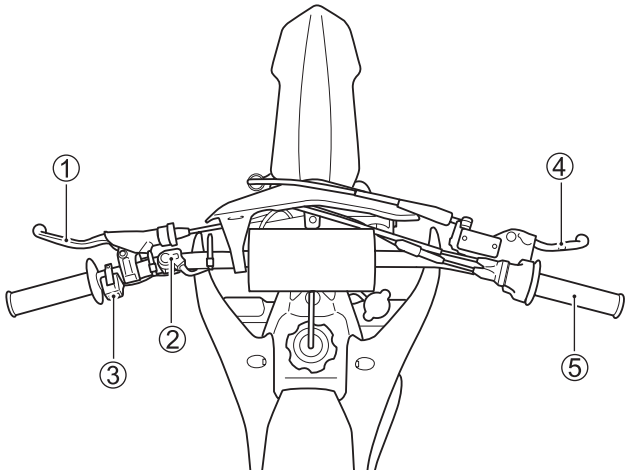

① Clutch lever
② S-HAC switch
③ Engine stop switch
④ Front brake lever
⑤ Throttle grip

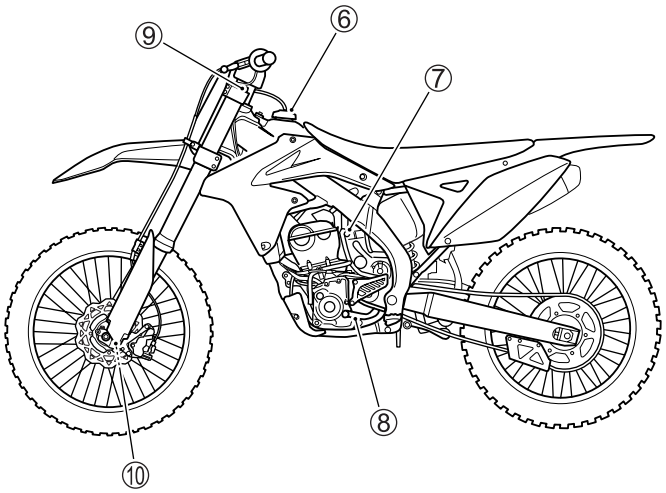

⑥ Fuel tank cap
⑦ Starter knob/Idle screw
⑧ Gearshift lever
⑨ Front fork rebound damping force adjuster (High speed/Low speed)
⑩ Front fork compression damping force adjuster

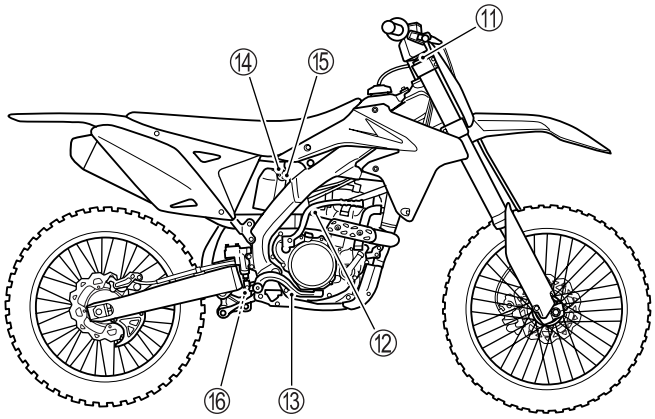

⑪ Front fork air valve
⑫ Kick starter lever
⑬ Rear brake pedal
⑭ Rear suspension compression damping adjuster (High speed/Low speed)
⑮ Rear suspension rebound damping force adjuster (Low speed)
⑯ Rear suspension rebound damping force adjuster (High speed)

ACCESSORY

SIDE STAND

This motorcycle is not equipped with a side stand. To support the motorcycle for a short period of time, use the accessory side stand that comes supplied with the motorcycle. When servicing the motorcycle, use a service stand and support the underneath of the engine securely. When operating the motorcycle, make sure to remove the accessory side stand.

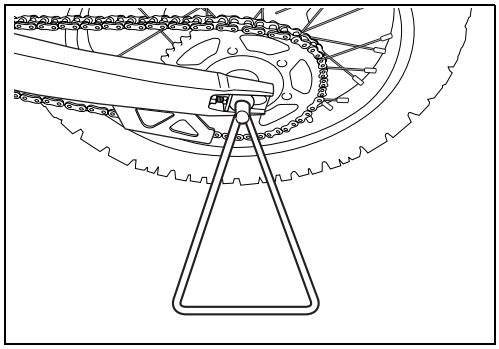

FUEL AND OIL RECOMMENDATION

Gasoline: Use only unleaded gasoline of at least 90 pump octane. (R/2 + M/2 method)
.....For USA and Canada

Use only unleaded gasoline of at least 95 octane. (Research method)
.....For other countries

OXYGENATED FUEL RECOMMENDATION (USA, Canada and EU)

Oxygenated fuels which meet the minimum octane requirement and the requirements described below may be used in your motorcycle without jeopardizing the New Vehicle Limited Warranty or the Emission Control System Warranty.

NOTE:
Oxygenated fuels are fuels which contain oxygen-carrying additives such as MTBE or alcohol.

Gasoline containing MTBE
Unleaded gasoline containing MTBE (Methyl Tertiary Butyl Ether) may be used in your motorcycle if the MTBE content is not greater than 15%. This oxygenated fuel does not contain alcohol.

Gasoline/Ethanol Blends
Blends of unleaded gasoline and ethanol (grain alcohol), also known as GASOHOL, are commercially available in some areas. Blends of this type may be used in your motorcycle if they are no more than 10% ethanol (E10). Make sure this gasoline-ethanol blend has octane ratings no lower than those recommended for gasoline.

Gasoline/Methanol Blends
Fuels containing 5% or less methanol (wood alcohol) may be suitable for use in your motorcycle if they contain co-solvents and corrosion inhibitors.

DO NOT USE fuels containing more than 5% methanol under any circumstances. Fuel system damage or motorcycle performance problems resulting from the use of such fuels are not the responsibility of Suzuki and may not be covered under the New Vehicle Limited Warranty or the Emission Control System Warranty.

NOTE:
* *To help minimize air pollution, Suzuki recommends that you use oxygenated fuels.*
* *Be sure that any oxygenated fuel you use has recommended octane ratings.*
* *If you are not satisfied with the drivability of your motorcycle when you are using an oxygenated fuel, or if engine pinging is experienced, substitute another brand as there are differences between brands.*

NOTICE

Spilled gasoline containing alcohol can damage the painted surfaces of your motorcycle.

Be careful not to spill any fuel when filling the fuel tank. Wipe spilled gasoline up immediately.

Engine oil: SUZUKI recommends the use of SUZUKI PERFORMANCE 4 MOTOR OIL or equivalent engine oil. Use of SG/SH/SJ/SL in API with JASO MA/MA1/MA2. The recommended viscosity is SAE 10W-40. If an SAE 10W-40 oil is not available, select an alternative according to the right chart..... For USA

MOTUL 300V 10W-40 (recommendation) or use a premium quality 4-stroke motor oil to ensure longer service life of your motorcycle. Use of SG/SH/SJ/SL in API with JASO MA/MA1/MA2. The recommended viscosity is SAE 10W-40. If an SAE 10W-40 motor oil is not available, select an alternative according to the right chart. ..... For other countries

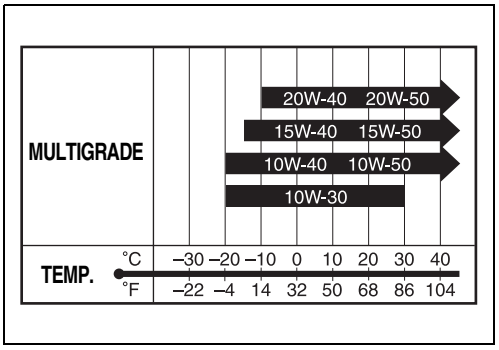

Energy Conserving

Suzuki does not recommend the use of “ENERGY CONSERVING” or “RESOURCE CONSERVING” oils. Some engine oils which have an API classification of SH, SJ or SL have an “ENERGY CONSERVING” indication in the API classification donut mark. These oils can affect engine life and clutch performance.

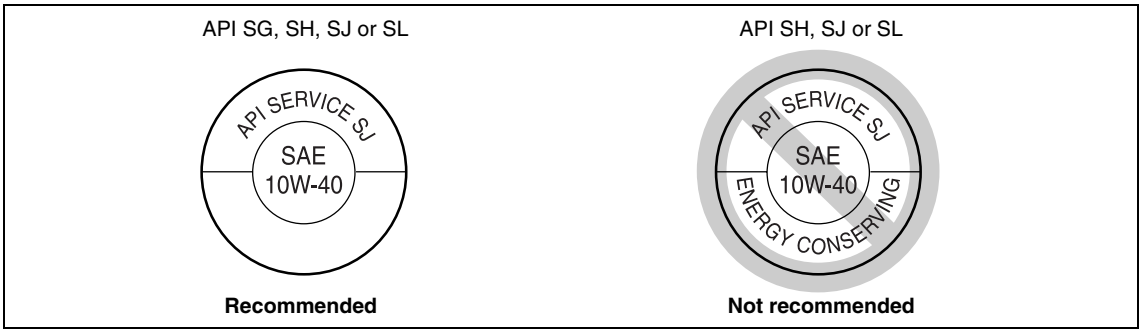

Fuel tank capacity: 6.5 L (1.7/1.4 US/Imp gal)

⚠ WARNING

Gasoline is a flammable material that can cause fire hazard or burns.

When handling gasoline, make sure to stop the engine and keep away from fire or spark.

OPERATING INSTRUCTIONS

NOTICE

Leaving the engine at idling speed after riding will cause engine overheat as this competition motorcycle does not have the radiator cooling fan and coolant reservoir. Riding the motorcycle under severe conditions such as muddy or sandy terrain with high ambient temperature can shorten time to be overheated.

Do not leave the engine at idling after riding the motorcycle. Inspect the radiator for proper coolant level before riding for practice and race.

STARTING THE ENGINE

- Inspect the engine oil level, coolant level and air cleaner condition before starting the engine. (☞2-11, -14, -23)
- Check that the fuel tank has enough fuel for practice or race before starting the engine.
- Shift the transmission into neutral.

NOTE:
When the clutch lever is pulled, the motorcycle can be started with the transmission in any gear.

NOTE:
Racing the engine in neutral will exceed the engine speed limit. Exceeding the engine speed limit can shorten engine life. Do not race the engine at high speed.

When the engine is cold:

1) Pull out the starter knob/idle screw ①.

NOTE:
When pulling the starter knob/idle screw ①, do not turn it.

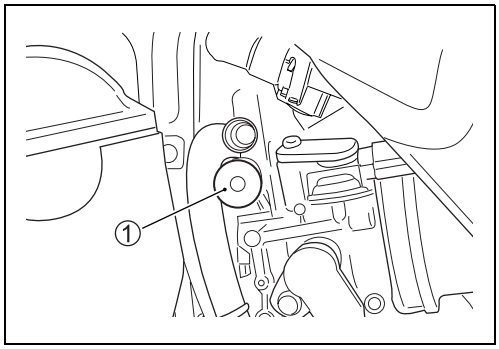

2) Kick down the kick starter lever slowly from the top position until engine compression resistance is felt, release the kick starter lever from this position and allow it to return to the top. While keeping the throttle closed, depress the kick starter lever strongly through the full stroke. Never open the throttle during the kick start operation.

NOTE:
When kick-starting the engine, make sure to remove the side stand.

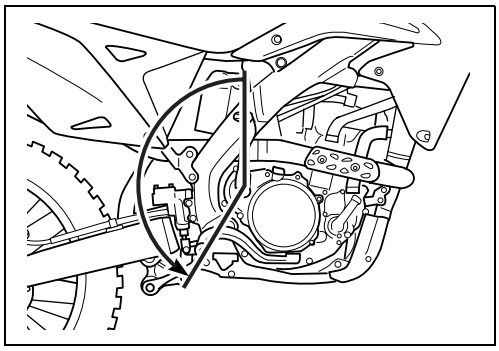

3) Return the starter knob/idle screw ① when the engine revs at steady speed.

NOTE:
Turning the starter knob/idle screw ① clockwise can decrease engine idle speed.
Turning the screw counterclockwise can increase engine idle speed. Standard knob position is 5 to 6 turns out from fully turned in position.

When the engine is already warm or restarts:
Kick down the kick starter lever slowly from the top position until engine compression resistance is felt, release the kick starter lever from this position and allow it to return to the top. While keeping the throttle closed, depress the kick starter lever strongly through the full stroke. Never open the throttle during the kick start operation.

NOTE:
If the engine fails starting, open the throttle fully and depress the kick starter lever slowly about 4 – 5 times to clear too rich fuel mixtures in the engine. Then, kick the engine over, leaving the throttle closed.

*1 If the engine is not started even after taking the above procedure, pull out the starter knob/idle screw for starting the engine. When the engine is started, push back immediately the starter knob/idle screw.

Conditions when the starter knob/idle screw is used	
Engine Condition	Starter Knob/Idle Screw
Warm engine	Push back (OFF) *1
Cold engine	Pull out (ON)

When the motorcycle is not used for long time:
Due to deterioration of fuel remaining in the fuel line for long period, engine will be difficult to start until the deteriorated (stale) fuel is discharged from the fuel line. Repeated kick operation is required for flushing the fuel line with fresh fuel.

1) Fill the fuel tank more than half full.
2) Shift the transmission into neutral.
3) While keeping the throttle approximately 1/4 open, repeat kick start operation 30 to 40 times.

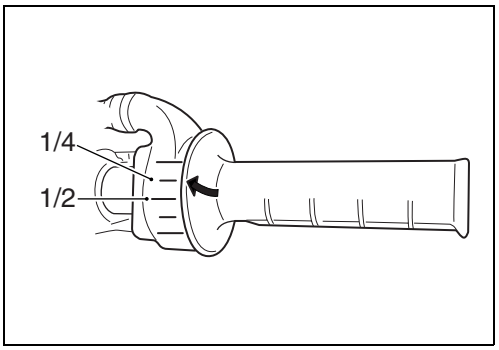

NOTE:
Fuel injection volume is controlled to increase in throttle open condition. However, do not open throttle more than 1/2 as fuel injection is shut off in wide open throttle in engine start mode.

4) Start the engine by following cold engine start procedure.

NOTE:
If the engine fails to start after several attempts, it could mean that the air-fuel mixture inside the combustion chamber is less than optimal. In this case, repeat kick start operation 4 to 5 times with throttle fully opened to clear too rich fuel mixtures in the engine. No fuel is injected with full throttle opening in engine start mode.

STOPPING THE ENGINE

1) Shift the transmission into neutral.
2) Push the engine stop switch ① to stop the engine.

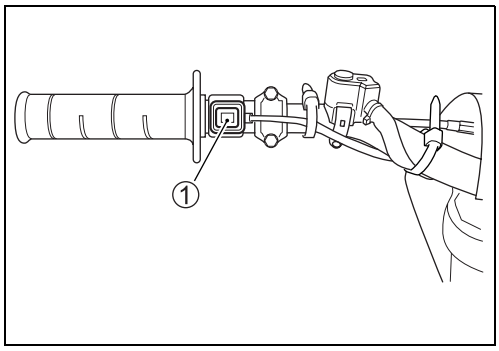

TRANSMISSION

This motorcycle has a 5-speed transmission. Neutral is located between low and 2nd. Engage first gear by pressing the lever down from the neutral position. You can shift into higher gears by lifting the shift lever once for each gear. When neutral is desired, press or lift the lever to a position halfway between low and 2nd gear.

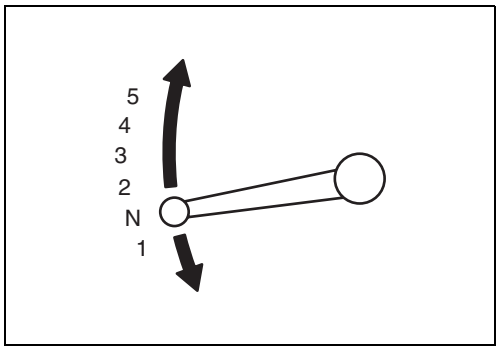

SELECTION OF ECM TUNING MAP

This motorcycle lets you select one of three ECM maps to suit weather and running conditions.
Refer to SELECTION OF ECM TUNING MAP for details.
(☞3-2)

SELECTION OF S-HAC (SUZUKI HOLESHOT ASSIST CONTROL) MAP

This is a system that assists operation during the start of races that use a starting gate.
Refer to SELECTION OF S-HAC (SUZUKI HOLESHOT ASSIST CONTROL) MAP for details. (☞3-4)

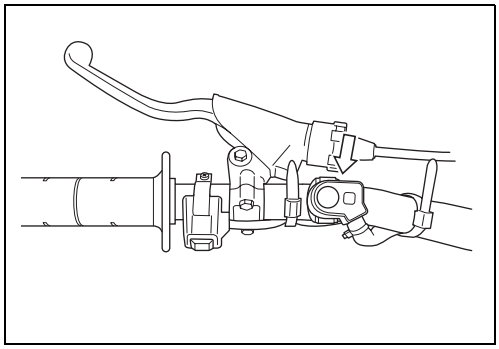

BREAK-IN (RUNNING-IN)

WHEN THE MOTORCYCLE IS NEW

1) Warm up the engine before starting off.
2) Ride for 60 minutes using less than 1/2 throttle opening.
3) Ride for 60 minutes using less than 3/4 throttle opening.

NOTE:

** The break-in (running-in) period is the period of greatest wear.*

** The bolts and nuts of the new machine can loosen quickly. Be sure to retighten the bolts and nuts during the break-in (running-in) period.*

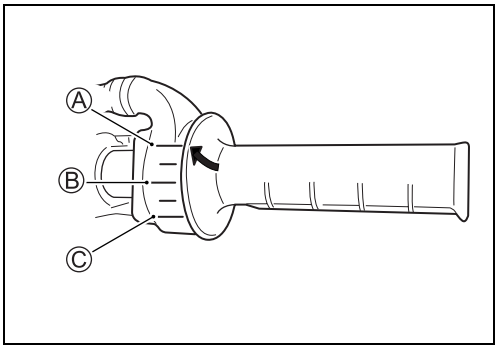

Ⓐ CLOSED
Ⓑ 1/2
Ⓒ FULL OPEN

WHEN ENGINE PARTS ARE REPLACED

Follow the same procedure when any of the following parts are replaced:

- Piston
- Piston ring
- Cylinder
- Crankshaft
- Crankshaft bearing

PERIODIC MAINTENANCE

CONTENTS

PERIODIC MAINTENANCE

CONTENTS

PERIODIC MAINTENANCE

INSPECTION BEFORE PRACTICE

WHAT TO CHECK	CHECK FOR
Spark plug	• Heat range, fouled electrode, tightness • Loose spark plug cap
Air cleaner element	• Dust • Lubrication
Engine oil	Oil level
Coolant	Coolant level
Cooling system	• Radiator hose damage • Engine coolant leak
Clutch	• Play • Smooth operation
Throttle	• Play • Smooth operation
Crankcase breather hose	Breather hose clogging and bend
Engine idle speed	Revolution speed
Brake fluid	Fluid level
Brakes	• Brake lever position • Brake pedal height • Operation
Drive chain and engine sprocket	• Slack, lubrication, wear • Loose sprocket bolt
Drive chain guide, buffer and rollers	Wear, damage
Suspension	• Smooth operation • Front fork air pressure
Wheels	• Spoke tension • Rim lock tightness or damage
Tires	Tire pressure
Steering	Smoothness, play
Exhaust pipe and muffler	• Exhaust gas leakage • Tightening torque
Bolts and nuts	Tightening torque

INSPECTION BEFORE RACE
(All items of inspection before practice on previous page plus)

WHAT TO CHECK	CHECK FOR
Clutch	Clutch plates wear and distortion
Brake pads	Wear
Sprockets	Wear
Fuel tank	Leakage
Fuel hose	• Damage • Hose connection
Exhaust pipe and muffler	Damage
Cylinder head	Combustion chamber carbon deposit
Piston and Cylinder	• Piston head carbon deposit • Piston and cylinder wear
Air cleaner	• Damage • Loose outlet tube

PERIODIC MAINTENANCE CHART

It is very important to inspect and maintain the machine regularly. Follow the guideline in the chart. The life of parts varies depending on the riding conditions. Perform more often than shown in the chart if you use the motorcycle under severe conditions.

Interval / Service Item					Remarks
	races	Every race	Every 3 races	Every 6 races	
	hours	Every 2 hours	Every 6 hours	Every 12 hours	
Spark plug		I	—	—	
Air cleaner		C	—	—	Replace air cleaner element as necessary.
Engine oil		—	R	—	Change after 1st initial break-in.
Engine oil filter		—	—	R	
Oil strainers		—	I	—	Inspect after 1st initial break-in.
Cooling-system		I	—	—	Replace radiator hose and engine coolant every year. Flushing for overhaul or storage.
Clutch		I	—	—	Replace clutch plates as necessary.
Throttle cable and clutch cable		I & L	—	—	
Throttle body		I	—	—	
Throttle position sensor		I	—	—	
Crankcase breather hose		I	—	—	
Fuel hose		I	—	—	Replace every 4 years.
Valve clearance		—	—	I	
Piston		—	—	R	
Piston ring		—	—	R	
Cylinder head, cylinder		—	—	I	
Muffler		I	—	—	
Silencer		I	—	R	Replace after race in sand.
Kick starter lever		I & L	—	—	
Drive chain		I & L	R	—	Adjust slack every 30 minutes.
Crankcase driveshaft oil seal		I	—	—	Inspect the oil seal frequently for abnormality (dust, stone or foreign materials). If necessary, replace it with a new one.
Engine sprocket		I	—	—	Check sprocket bolt for looseness at each race thereafter.
Rear sprocket		I	—	—	Check and retighten sprocket bolts at initial and subsequent 10 minutes of riding and each race thereafter.
Drive chain buffer and guide		—	R	—	
Brake		I	—	—	Replace brake hose and fluid every year.
Front brake caliper axle bolt		—	T	—	
Front fork oil		—	R	—	Change after 1st initial break-in.
Front fork		I	—	—	Check front fork inner tube frequently for abnormality. Check the air pressure.

Interval / Service Item					Remarks
	races	Every race	Every 3 races	Every 6 races	
	hours	Every 2 hours	Every 6 hours	Every 12 hours	
Rear suspension		I	—	—	Check rear suspension system frequently and apply the grease to the pivoting portion as necessary.
Tire		I	—	—	
Spoke nipple		I	—	—	Inspect every 20 min. up to initial 2 hours then check before each ride.
Steering		I	—	—	
Frame		I	—	—	
Swingarm		I	—	—	
Fuel tank		I	—	—	
Bolts and nuts		T	—	—	Retighten every 1 hour.

NOTE: R = Replace, C = Clean, T = Tighten, I = Inspect and clean, adjust lubricate or replace if necessary, L = Lubricate

ENGINE RUN TIME INDICATION PROCEDURE

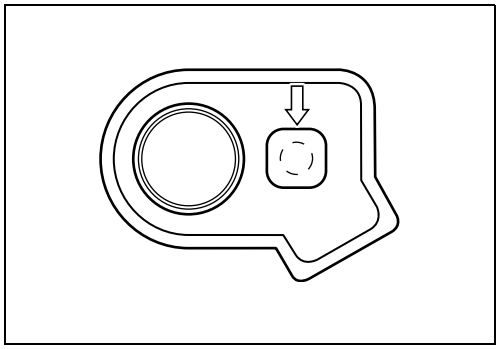

1. Connect a 12 volt battery to the service coupler using the battery lead wire. (☞4-50)
2. After indicator light will be lit for 2 seconds (lamp check), engine run time will be displayed by indicator light lighting time.

36890-28H00: Battery lead wire (option)

NOTE:

* *Lighting of lamp check and engine run time is made only at the first time, and when there is DTC available, this DTC will be displayed repeatedly.*
* *Indicator light will be lit for 0.2 sec. per 1 hour of engine run time.*
  However, the display of engine run time is limited to 100 hours (lit for 20 sec.)
* *Perform the same operation when starting the engine.*

EXAMPLE: In the case that the engine run time is 12 hours.

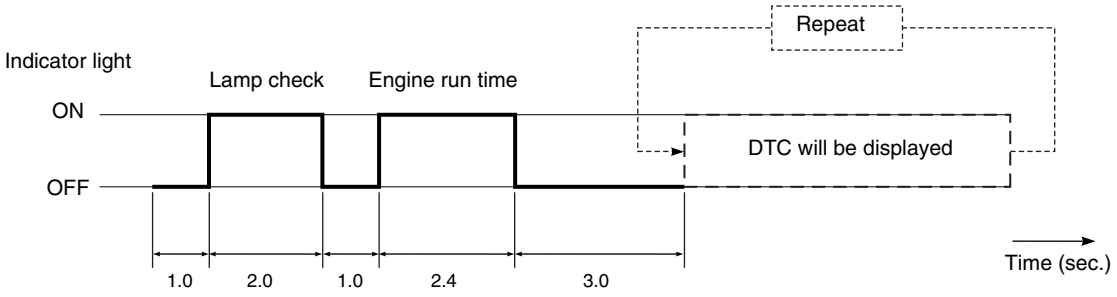

ENGINE RUN TIME RESET PROCEDURE

1. Connect a 12 volt battery to the service coupler using the battery lead wire. (☞4-50)
2. After connecting the battery lead wire, turn the throttle grip to full open within 2 seconds, then maintain this state for 5 to 10 seconds.
3. Fully close the throttle grip for more than 5 seconds.
4. Disconnect the battery lead wire.

36890-28H00: Battery lead wire (option)

NOTE:
In case of TP sensor failure, no engine run time reset operation is possible.

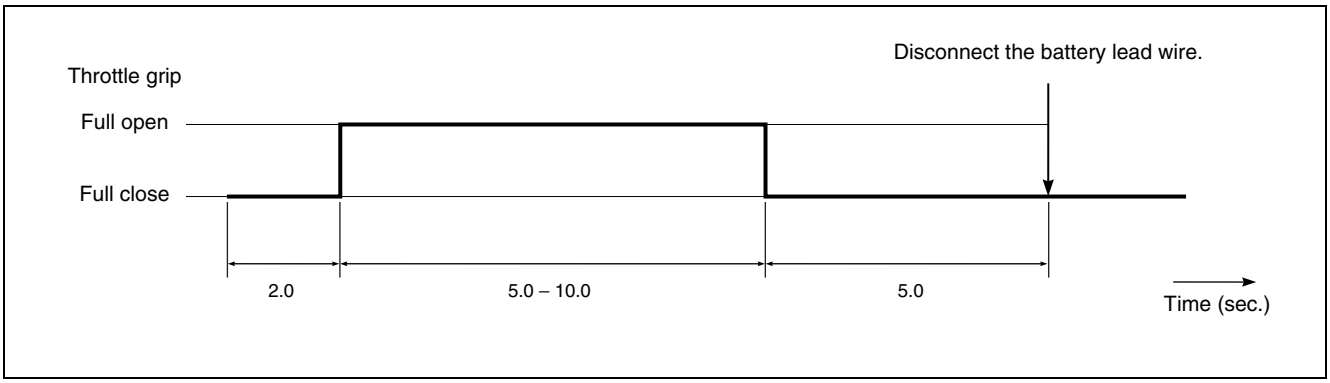

SPARK PLUG

- Remove the seat. (☞4-2)
- Remove the radiator covers and fuel tank. (☞4-2)
- Hold the cylinder head cover bolt immovable with the wrench.
- Remove the spark plug cap retainer ① by removing its bolts.
- Disconnect the spark plug cap.

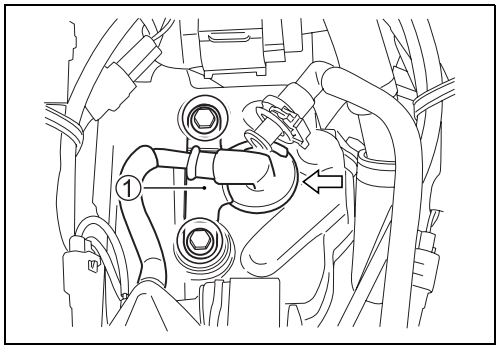

- Clean the spark plug cap and spark plug hole.
- Remove the spark plug with the special tool.

TOOL 09930-10121: Spark plug socket set

NOTE:
Remove the dirt around the spark plug before removing the spark plug to prevent dirt from entering the combustion chamber.

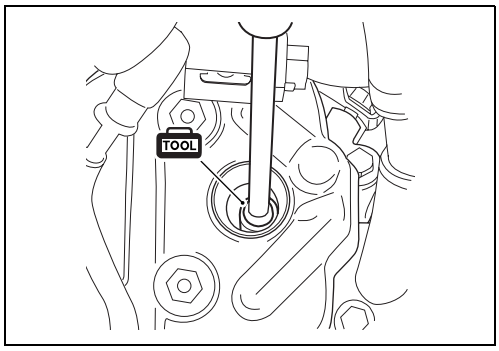

- Inspect the spark plug condition, electrode color, carbon deposits, spark plug gap and insulator damage.
- If it is extremely worn or burnt, replace the spark plug.
  Also, replace the spark plug if it has a broken insulator, damaged thread, etc.
- Inspect the porcelain tip color.

Porcelain tip color	Cause
White (overheated)	• Hot type spark plug • Advanced ignition timing • Lean air/fuel mixture • Deteriorated fuel
Black (fouled)	• Cold type spark plug • Retarded ignition timing • Rich air/fuel mixture

- Measure the spark plug gap Ⓐ with a wire gauge.
- If it is not within the specification, replace the spark plug.

NOTE:
To prevent the damage of iridium center electrode, use a wire gauge to check the gap. Never adjust the spark plug gap.

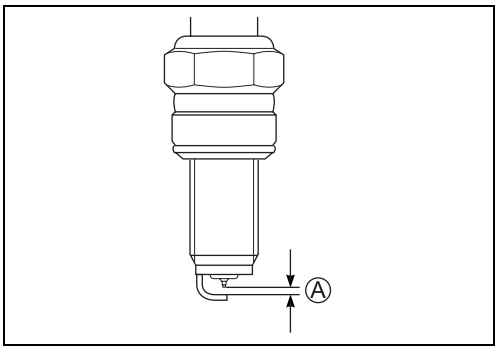

DATA Spark plug gap: 0.9 – 1.0 mm (0.035 – 0.039 in)

DATA Standard Spark plug

NGK	CR8EIB-10

- Tighten the spark plug with specified tightening torque after tightening the spark plug temporarily with fingers.

TOOL 09930-10121: Spark plug socket set

Spark plug: 11 N·m (1.1 kgf-m, 8.0 lbf-ft)

- Connect the spark plug cap securely as shown.
- Install the spark plug cap retainer ①.
- Tighten the spark plug cap retainer bolts ② to the specified torque.

Spark plug cap retainer bolt: 11 N·m (1.1 kgf-m, 8.0 lbf-ft)

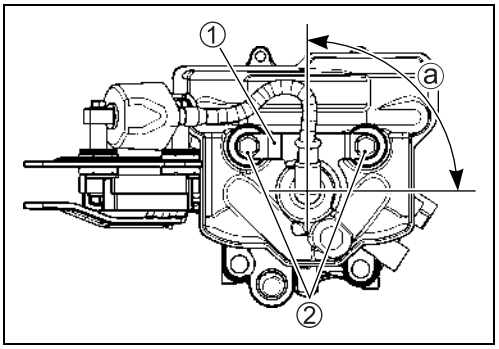

ⓐ 90 ± 20°

AIR CLEANER

AIR CLEANER ELEMENT REMOVAL

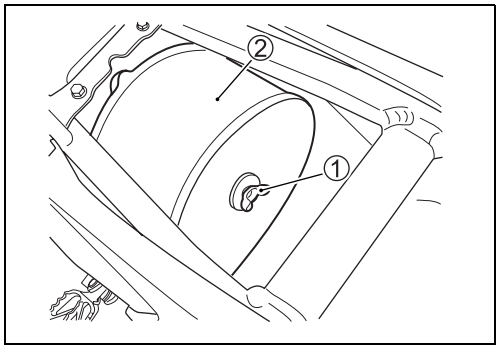

- Remove the seat. (☞4-2)
- Remove the wing bolt ①.
- Remove the element ② from the element holder.

AIR CLEANER ELEMENT WASHING

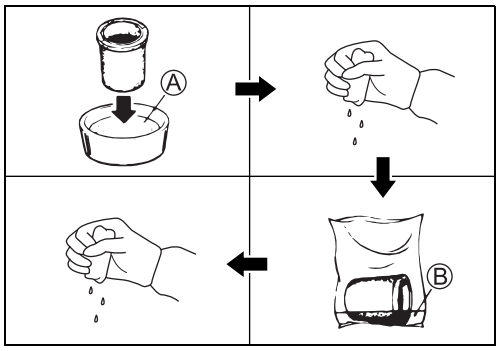

- Fill a washing pan large enough to hold the element with a non-flammable cleaning solvent Ⓐ. Immerse the element in the solvent and wash it.

Ⓐ: MOTUL AIR FILTER CLEAN or equivalent cleaning solvent

- Squeeze the element by grasping it to remove excess solvent. Do not twist or wring the element or it will develop cracks.
- Dry the element in a plastic bag, pour in some foam filter oil Ⓑ and work the oil into the element.

Ⓑ: MOTUL AIR FILTER OIL or equivalent filter oil

- Squeeze the element to remove excess oil.

AIR CLEANER ELEMENT INSTALLATION

- Apply filter oil to the element base where it contacts the air cleaner box.
- Fit the element ② onto the element holder ①.

NOTE:
Fit the projection Ⓐ of the element holder to the hole of the element ②.

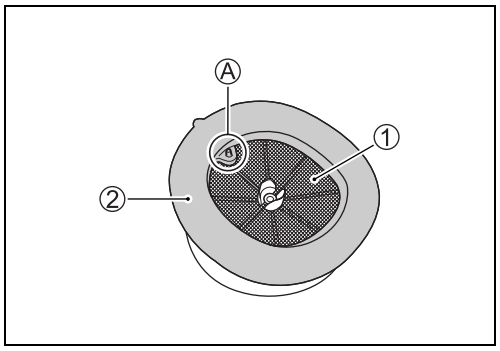

- Install them in the air cleaner box by engaging the projection Ⓐ of the element holder with the hole Ⓑ of the air cleaner box.

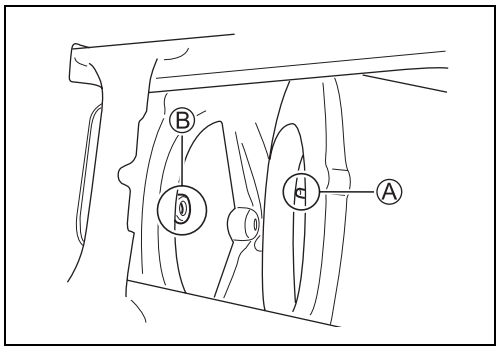

NOTICE
Improper element installation allows dust and dirt to enter the combustion chamber. It can result in piston and cylinder wear. **Be sure to check the element seals properly after installing the element.**

NOTE:
Follow the instructions below to prevent water from entering the engine through the air cleaner element when cleaning the motorcycle.

- Cover the element with a plastic bag.
- Install the seat.
- Cover the inlet holes on the frame covers in order to prevent water from entering the air cleaner box.
- Do not spray high pressure water to the air cleaner box.

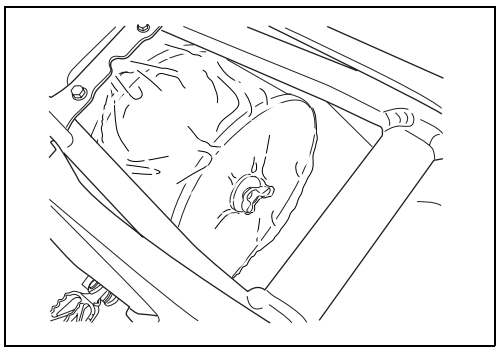

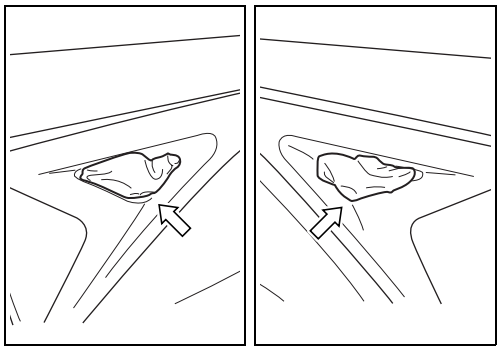

ENGINE OIL AND OIL FILTER

⚠ WARNING

Improper engine oil treatment is hazardous.

Read engine oil container instruction before replacing the engine oil.

NOTICE

Improper engine oil selection can cause clutch slip.

Do not use engine oil which has friction decrease additives.

NOTE:
* *Do not mix engine oil. Use only good quality engine oil.*
* *Be careful that dirt does not enter into crankcase through engine oil filler.*
* *Wipe off spilled engine oil.*
* *Improper engine oil level can affect engine performance.*

⚠ CAUTION

Hot engine oil and exhaust pipes can burn you.

Wait until the engine oil drain plug and exhaust pipes cool before draining oil.

⚠ WARNING

Children and pets may be harmed by swallowing new or used oil. Repeated, prolonged contact with used engine oil may cause skin cancer. Brief contact with oil may irritate skin.

Keep new and used oil and used oil filters away from children and pets. To minimize your exposure to used oil, wear a long-sleeve shirt and moisture-proof gloves (such as dishwashing gloves) when changing oil. If oil contacts your skin, wash thoroughly with soap and water. Launder any clothing or rags if wet with oil. Recycle or properly dispose of used oil and filters.

NOTE:
Recycle or properly dispose of used oil.

INSPECTION BEFORE ENGINE OIL LEVEL CHECK

- Before starting the engine, check that there is sufficient oil for operating the engine.

NOTICE
If the engine is started with insufficient or no oil, the engine components will possibly be damaged. **Always keep the engine oil at the specified level.**

- Tilt the motorcycle to the right and check the oil level through the inspection window ①.

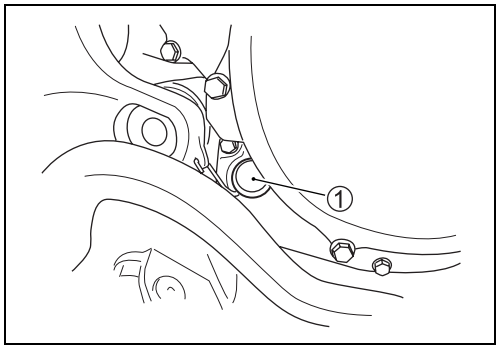

ENGINE OIL LEVEL INSPECTION

- During inspection, hold the motorcycle in an upright position on a level surface.

NOTE:
The oil level measurement may become inaccurate unless the motorcycle is held upright as the motorcycle inclination affects the oil level.

- Warm up the engine. Start and run the engine at idle for 3 minutes.

NOTE:
Do not run the engine at a speed higher than idling, otherwise the oil level to be inspected may be affected.

- Stop and leave the engine standstill for 2 minutes. Check the oil level through the inspection window ①.
- If it is lower than the upper line ③, remove the filler cap ② and pour an adequate amount of recommended oil.
- If it is upper than the upper line ③, drain oil until it reaches the upper line ③. (☞2-16)

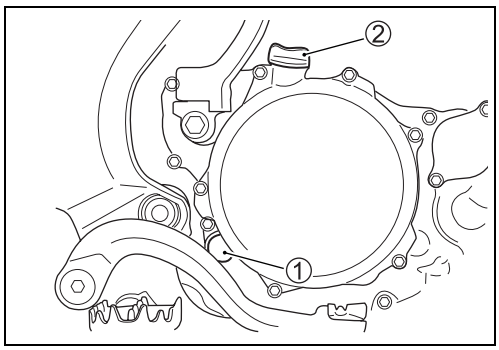

⚠ CAUTION

Exhaust system can be hot enough to burn you.

Do not touch the exhaust system when removing the oil filler cap.

- Repeat the above-mentioned procedure.

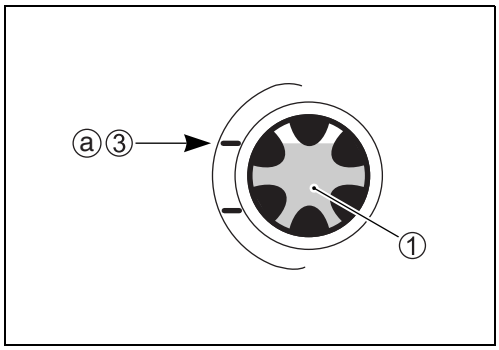

ⓐ Proper amount of oil

ENGINE OIL CHANGE

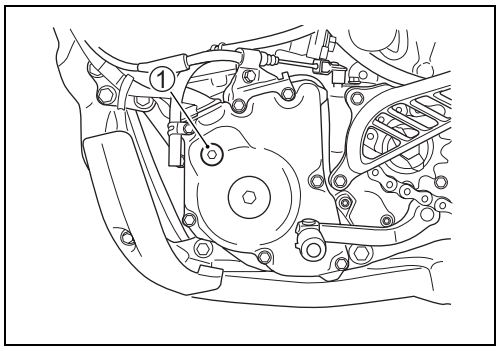

- During inspection, hold the motorcycle in an upright position on a level surface.
- Warm up the engine.
- Remove the filler cap, TDC plug ①, drain plug ② and drain No.2 plug ③. Drain engine oil.
- Replace the O-ring with a new one and tighten the TDC plug ①.

TDC plug: 14 N·m (1.4 kgf-m, 10.0 lbf-ft)

- Depress the kick starter lever ten times or more.

NOTE:
To avoid turning on the engine, push along the engine stop switch while depressing the kick starter lever.

- Swing the motorcycle to the right and left two times or more. Drain engine oil thoroughly.
- Replace the gasket washers with new ones and tighten the drain plugs.

Oil drain plug: 21 N·m (2.1 kgf-m, 15.0 lbf-ft)
Oil drain No.2 plug: 12 N·m (1.2 kgf-m, 8.5 lbf-ft)

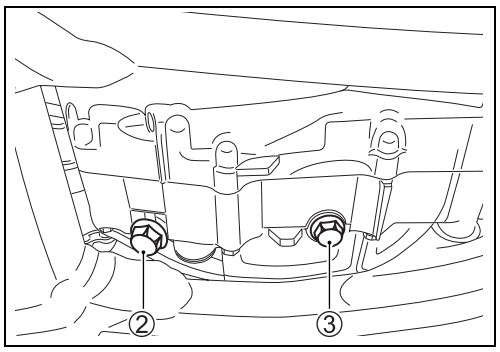

- Pour specified amount of engine oil.

SAE 10W-40, API SG/SH/SJ/SL with JASO MA/MA1/MA2 .....For USA
MOTUL 300V 10W-40 (Recommendation oil) or
SAE 10W-40, API SG/SH/SJ/SL with JASO MA/MA1/MA2 .....The others

DATA

Oil change.....	**850 ml (0.9/0.7 US/Imp qt)**
Filter change.....	**900 ml (1.0/0.8 US/Imp qt)**
Overhaul.....	**1 000 ml (1.1/0.9 US/Imp qt)**

- Tighten the filler cap.
- Run the engine for 3 minutes and stop it. Wait 2 minutes.
- Inspect the oil level. (☞2-15)

ENGINE OIL FILTER REPLACEMENT

- Drain the engine oil as described in the engine oil replacement procedure.
- Remove the oil filter cap ①, spring ② and oil filter ③.

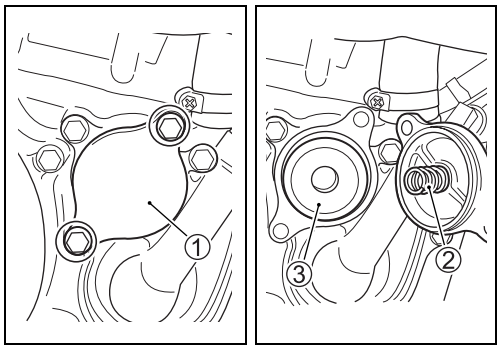

- Apply engine oil lightly to the gasket of new oil filter before installation.
- Install the new oil filter.

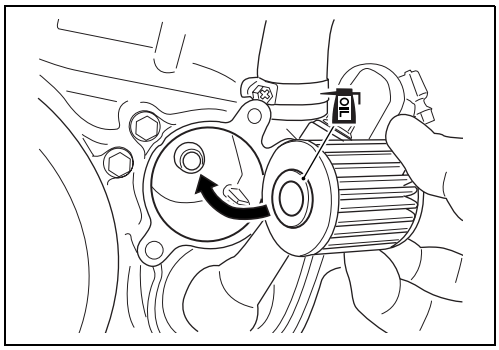

NOTICE
If the filter is installed improperly, serious engine damage may result. **Make sure that the oil filter installed properly.**

- Apply engine oil lightly to the new O-ring.

NOTE:
Use the new O-ring to prevent oil leakage.

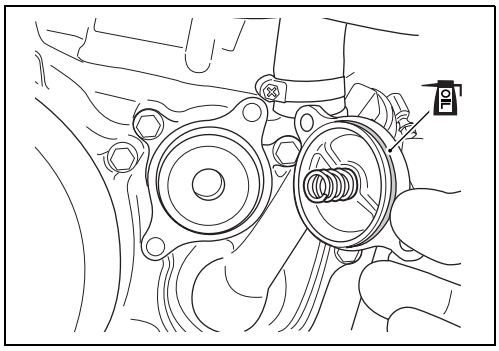

- Install the oil filter cap and tighten the bolts.

Oil filter cap bolt: 11 N·m (1.1 kgf-m, 8.0 lbf-ft)

- Add new engine oil and check the oil level as described in the engine oil level inspection procedure.

DATA

Oil change	**850 ml (0.9/0.7 US/Imp qt)**
Filter change	**900 ml (1.0/0.8 US/Imp qt)**
Overhaul	**1 000 ml (1.1/0.9 US/Imp qt)**

OIL STRAINERS

OIL STRAINER (No.1) REMOVAL

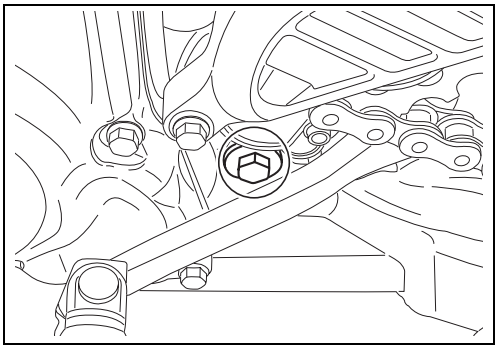

- Hold the motorcycle upright.
- Clean the engine to avoid engine trouble.
- Drain engine oil. (☞2-16)
- Remove the oil strainer cap.

NOTE:
Hold the motorcycle upright while replacing the oil strainer.

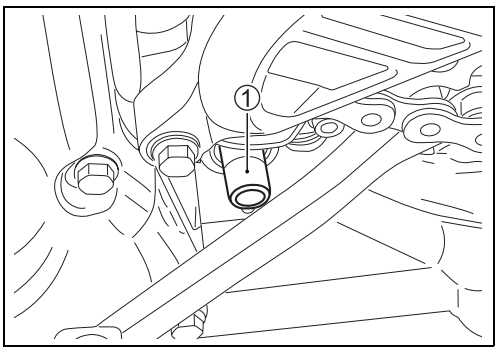

- Pull out the oil strainer ①.

NOTE:
Inspect the feed pump side oil strainer (No.1) when the engine oil is replaced.

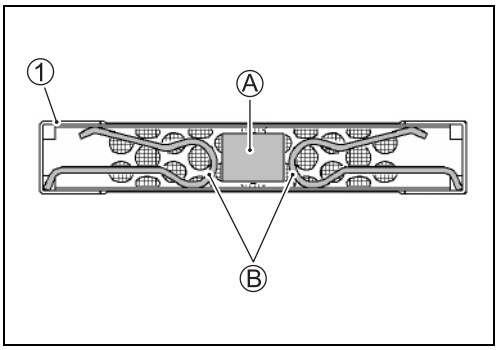

Ⓐ Magnet
Ⓑ Clip

OIL STRAINER (No.2) REMOVAL

- Drain engine oil. (☞2-16)
- Remove the gearshift lever. (☞4-6)
- Remove the magneto cover. (☞4-52)
- Remove the oil pump No.2 cover ② by removing its bolts ①.

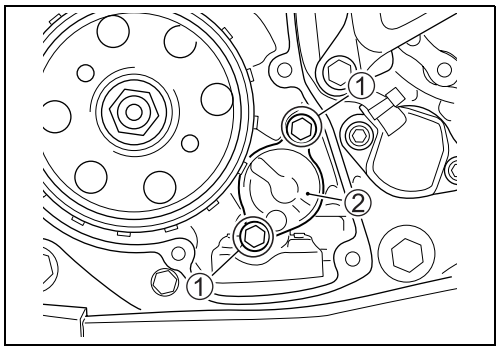

- Remove the oil strainer No.2 ④ by removing its bolts ③.

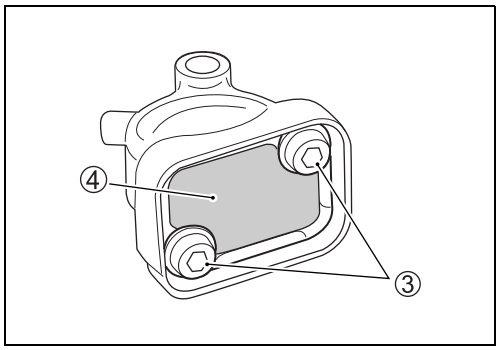

INSPECTION AND CLEANING

OIL STRAINER (No.1)

- Check the oil strainer for any damage or clogging.
- If the oil strainer is damaged, replace the oil strainer.
- If the oil strainer is clogging, clean the oil strainer in the following procedures.

NOTE:
Clean the oil strainer thoroughly up to first 2 to 3 times because steel particles will be caught when the engine is new.

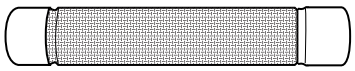

- Remove the clip ①.

⚠ CAUTION

Sharp edge steel particles around the oil strainer mag-net can harm your fingers.

Wear protective gloves when removing steel particles from the oil strainer.

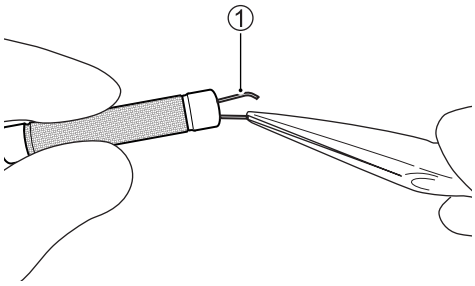

- Remove the magnet ② using the suitable steel rod.

⚠ WARNING

Magnet is harmful if swallowed.

If removed magnet is swallowed, immediately contact a physician.

NOTE:
Do not bring the magnet close to a magnetic card, a cellular phone, a watch and so on because this magnet has strong magnetic force.

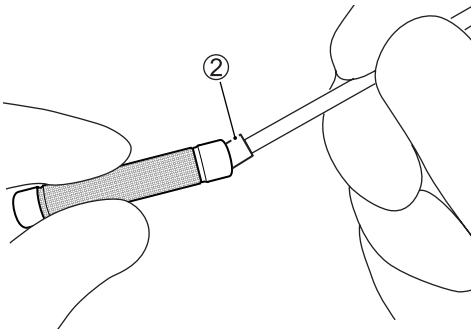

- Clean the magnet and oil strainer.

- Insert the magnet and clip into the oil strainer. Hook the clip ① to the groove Ⓐ.

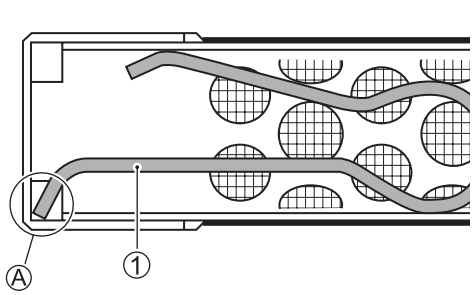

OIL STRAINER (No.2)

- Check the oil strainers for any damage or clogging.
- If the oil strainer is clogging, clean the oil strainer with a compressed air.

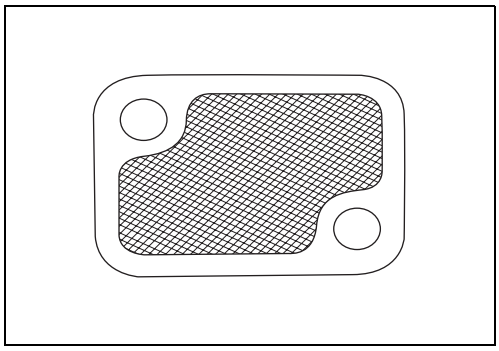

- Clean the oil nozzle by applying compressed air.

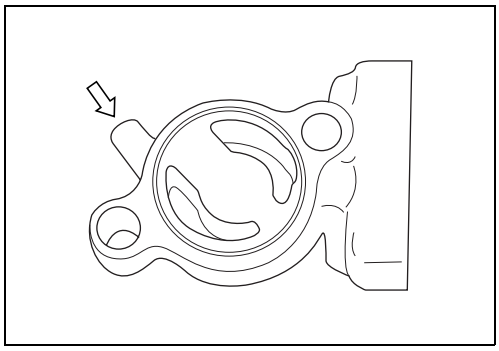

OIL STRAINER (No.2) INSTALLATION

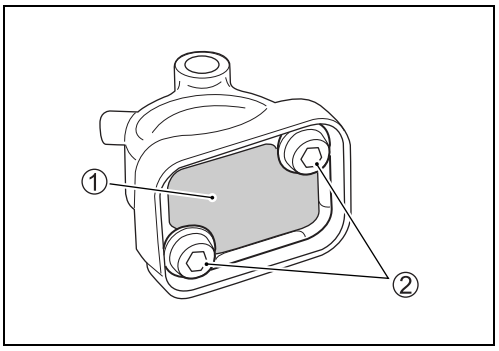

- Install the oil strainer No.2 ① and tighten the oil strainer No.2 bolts ② to the specified torque.

Oil strainer No.2 bolt: 5.5 N·m (0.55 kgf-m, 4.0 lbf-ft)

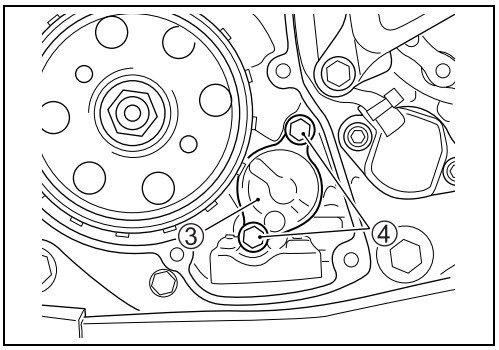

- Install the oil pump No.2 cover ③ and tighten the oil pump No.2 bolts ④ to the specified torque.

Oil pump No.2 bolt: 11 N·m (1.1 kgf-m, 8.0 lbf-ft)

- Install the magneto cover. (☞4-54)
- Install the gearshift lever.

INSPECTION AFTER INSTALLATION

- Engine oil level and oil leakage (☞2-15)

OIL STRAINER (No.1) INSTALLATION

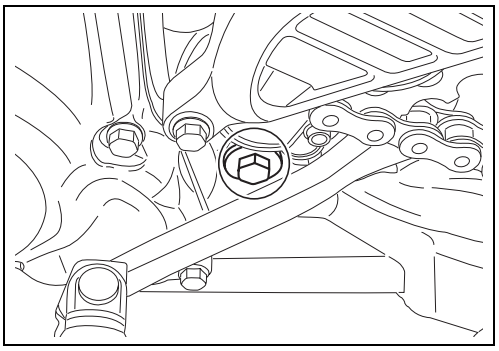

- Install the oil strainer and then tighten the oil strainer cap to the specified torque.

NOTE:
Replace the gasket washer with a new one.

Engine oil strainer cap: 21 N·m (2.1 kgf-m, 15.0 lbf-ft)

- Add new engine oil and check the oil level. (☞2-15)

ENGINE COOLANT

ENGINE COOLANT LEVEL CHECK

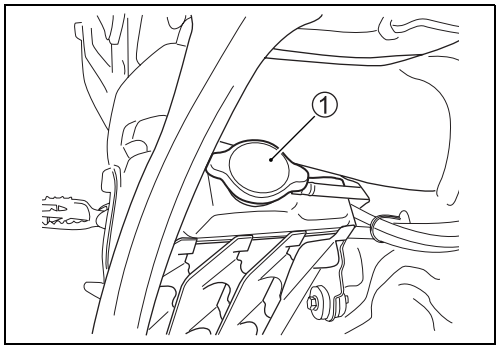

⚠ WARNING

You can be injured by scalding fluid or steam if you open the radiator cap when the engine is hot.

Do not open the radiator cap when the engine is hot. Wait until engine cools.

- Remove the radiator cap ①.
- Check that the engine coolant level is at the bottom of the inlet hole. If not, replenish the radiator with specified engine coolant.
- Tighten the radiator cap ① securely.

NOTICE

Improperly tightening the radiator cap will prevent the cooling system from reaching the specified operating pressure and will cause overheat.

Tighten the radiator cap until it locks firmly.

NOTE:

** This motorcycle does not have an overflow tank at the end of breather hose. Therefore, engine coolant level may decrease while riding. Check the engine coolant level every time before riding.*

** When replenishing engine coolant with SUZUKI LONG LIFE COOLANT, be sure to use engine coolant mixed with distilled water at the ratio of 50:50. Adding only water will dilute engine coolant and it may decrease cooling performance.*

** If the motorcycle is to be exposed to temperatures below –31°C (–24°F), the percentage of antifreeze should be increased to 55% or 60%, according to figure 1.*

Antifreeze density	Freezing point
50%	–31°C (–24°F)
55%	–40°C (–40°F)
60%	–55°C (–67°F)

** "SUZUKI SUPER LONG LIFE COOLANT" is pre-mixed to the proper ratio. Add only "SUZUKI SUPER LONG LIFE COOLANT" if coolant level drops. It is not necessary to dilute "SUZUKI SUPER LONG LIFE COOLANT" when replacing coolant.*

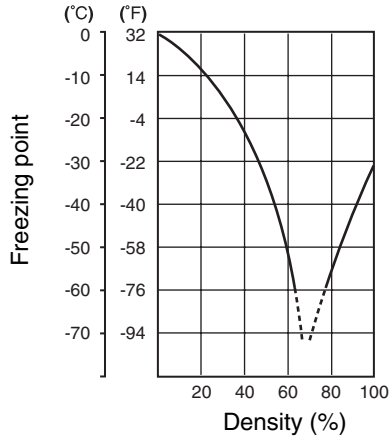

Fig.1 Engine coolant density-freezing point

ENGINE COOLANT REPLENISHMENT

- Use “SUZUKI SUPER LONG LIFE COOLANT” or “SUZUKI LONG LIFE COOLANT”.

NOTE:
The radiator, cylinder and cylinder head are made of aluminum alloy. Using non-recommended engine coolant may corrode aluminum alloy and may clog the coolant passageways.

⚠ WARNING

Engine coolant is harmful if swallowed or if it comes in contact with your skin or eyes.

Keep engine coolant away from children and pets. Call your doctor immediately if engine coolant is swallowed and induce vomiting. Flush eyes or skin with water if engine coolant gets in eyes or comes in contact with skin.

COOLING SYSTEM INSPECTION

Inspect the following items before practice and races.

- Engine coolant leakage
- Radiator hose cracks and deterioration
- Radiator mounting condition
- Radiator over flow hose condition
- Radiator fin condition

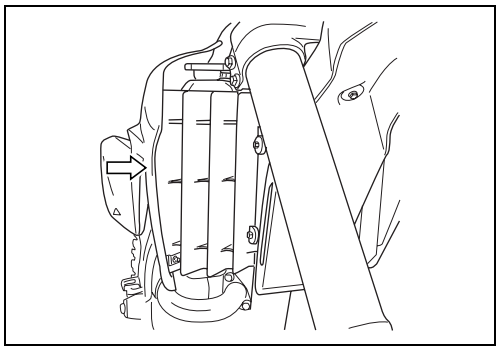

CLUTCH CABLE

Adjust the clutch cable play as follows:

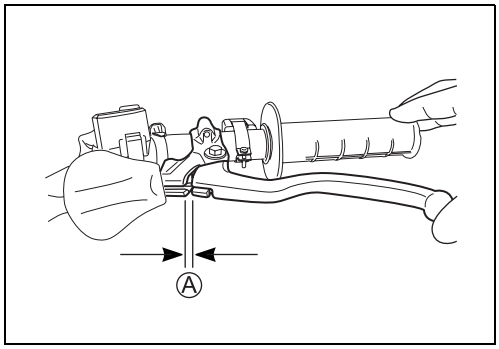

MAJOR ADJUSTMENT

- Loosen the lock-nut ①.
- Turn adjuster ② so the clutch lever clearance Ⓐ measured at the lever holder obtains 2 – 3 mm (0.08 – 0.12 in) when squeezing the lever until pressure is felt.
- Tighten the lock-nut ① to the specified torque.

DATA Clutch lever clearance Ⓐ: 2 – 3 mm (0.08 – 0.12 in)

Cable adjuster lock-nut: 4.5 N·m (0.45 kgf-m, 3.25 lbf-ft)

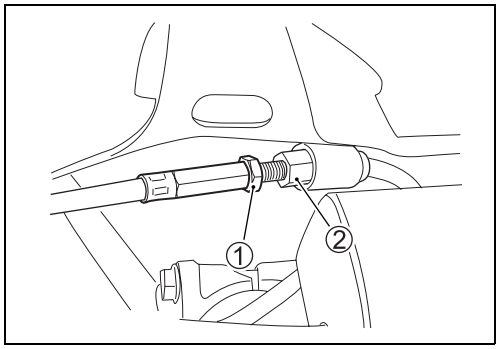

MINOR ADJUSTMENT

- Turn adjuster ③ so the clutch lever clearance Ⓐ measured at the lever holder obtains 2 – 3 mm (0.08 – 0.12 in) when squeezing the lever until pressure is felt.

DATA Clutch lever clearance Ⓐ: 2 – 3 mm (0.08 – 0.12 in)

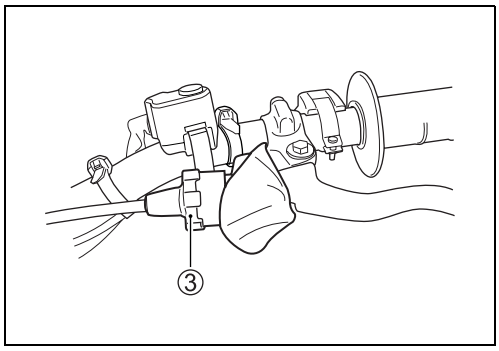

THROTTLE CABLE

⚠ WARNING

Inadequate throttle cable play can cause engine speed to rise suddenly when you turn the handlebars. This can lead to loss of control and an accident.

Adjust the throttle cable play so that engine speed does not rise due to handlebars movement.

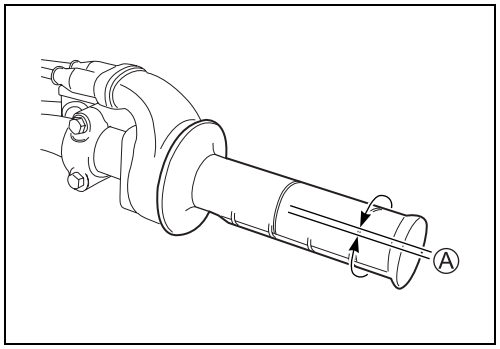

Adjust the throttle cable play Ⓐ as follows:

THROTTLE CABLE ADJUSTMENT

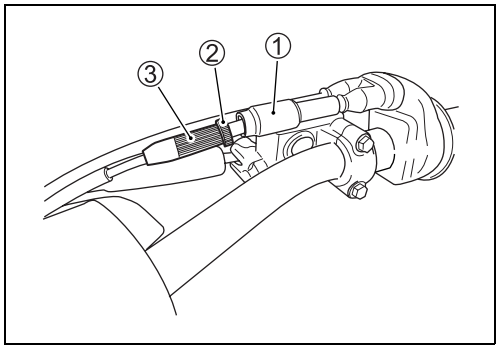

- Remove the boot ①.
- Loosen the lock-nut ②.
- Turn adjuster ③ so the throttle grip has 2 – 4 mm (0.08 – 0.16 in) play in circumference.
- Tighten the lock-nut ②.
- Reinstall the boot ①.

DATA Throttle cable play Ⓐ: 2 – 4 mm (0.08 – 0.16 in)

⚠ WARNING

Improper throttle cable adjustment can lead to loss of control and an accident.

After the adjustment is completed, check that handlebars movement does not raise the engine idle speed and that the throttle grip returns smoothly and automatically.

NOTE:
The throttle cable has boots. Check that the boots are fit securely. Do not apply water directly to the boots when washing. Wipe off dirt from the boots with a wet cloth when the boots are dirty.

THROTTLE CABLE OIL SUPPLY

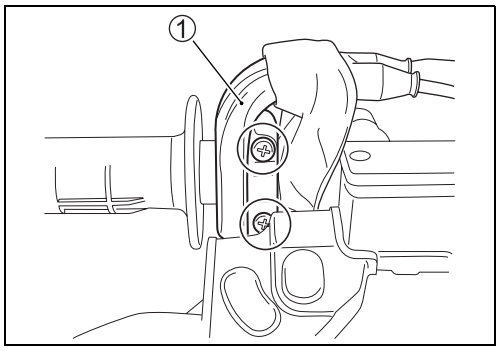

- Mark the paint mark to the matching surface of throttle case and handlebars before removing. (☞4-92)
- Remove the throttle case ①.

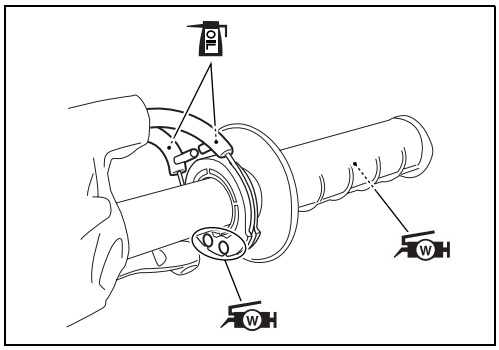

- Apply oil to the throttle cables.
- Apply grease to the sliding surface of the handlebars and throttle grip.
- Apply grease to the throttle cable spool.

99000-25350: SUZUKI WATER RESISTANT GREASE EP2 or equivalent

- Install the throttle case. (☞4-98)

THROTTLE BODY

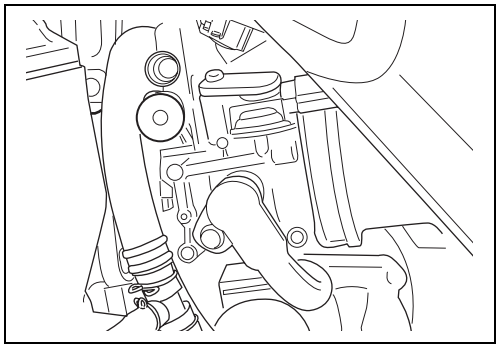

- Inspect the throttle body for dirt or mud. If any dirt or mud is found, clean the throttle body.

NOTE:
Do not apply pressured water to the throttle cable cover drain as muddy water can get into cover.

THROTTLE POSITION SENSOR (TP SENSOR)

- Connect a 12 volt battery to the service coupler ② using the battery lead wire ①.

  36890-28H00: Battery lead wire (option)

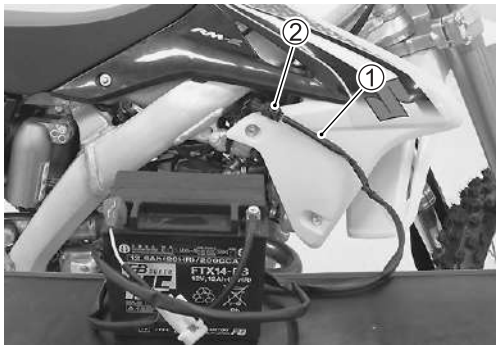

- Insert the needle point probes to the TP sensor lead wire coupler.
- Measure the TP sensor output voltage at the coupler (between ⊕ Yellow and ⊖ B/Br) by turning the throttle grip. If necessary, adjust the TP sensor. (☞4-50)

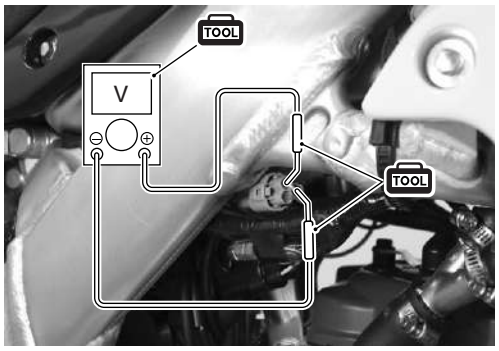

DATA TP sensor output voltage
Throttle valve is closed: 0.60 – 0.64 V
Throttle valve is opened: 3.60 – 4.00 V

TOOL 09900-25008: Multi circuit tester set
09900-25009: Needle point probe set

- Check the engine starting operation and engine idle speed. (☞2-29)

ENGINE IDLE SPEED

- Adjust the throttle cable play. (☞2-26)
- Warm up the engine.

NOTE:
Make this adjustment when the engine is hot.

- Connect the special tool (engine tachometer) to the high-tension cord.

TOOL 09900-26006: Engine tachometer

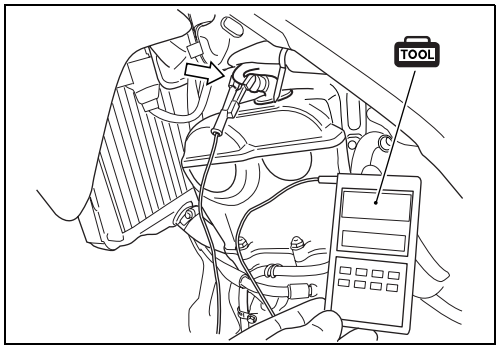

- Start the engine, turn the starter knob/idle screw ① and set the engine idle speed as follows.

DATA Engine idle speed: 2 200 ± 50 r/min

Starter knob/idle screw

Turn	Engine idle speed
Clockwise	Decrease
Counterclockwise	Increase

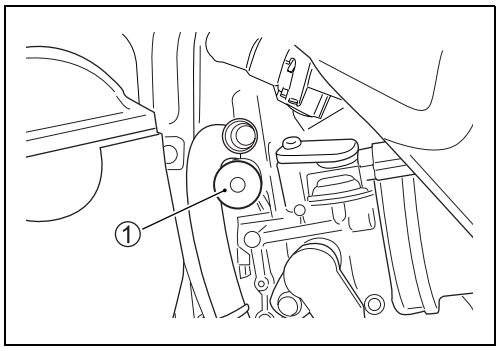

CRANKCASE BREATHER HOSE

- Inspect the crankcase breather hoses for damage, clogging and bend. If any defects are found, the breather hose must be replaced.

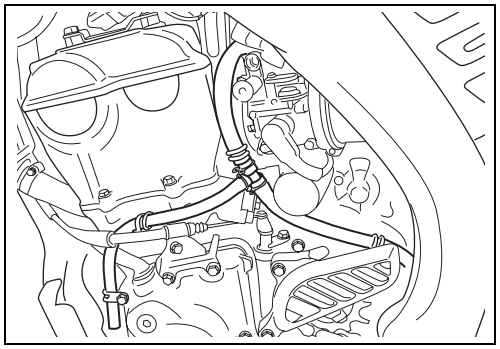

FUEL HOSE

- Inspect the fuel hose for damage and fuel leakage. If any defects are found, the fuel hose must be replaced.
- Replace the fuel hose every four years.

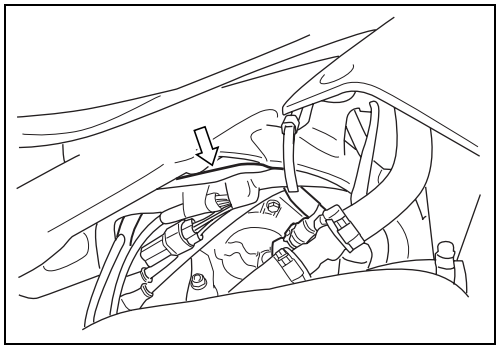

VALVE CLEARANCE

- Remove the seat. (☞4-2)
- Remove the radiator covers and fuel tank. (☞4-2)
- Disconnect the spark plug cap and remove the spark plug. (☞2-9)
- Remove the TO sensor ① from the bracket.
- Remove the cylinder head cover ③ and gasket ④ by removing the bolts ②. (☞4-14)

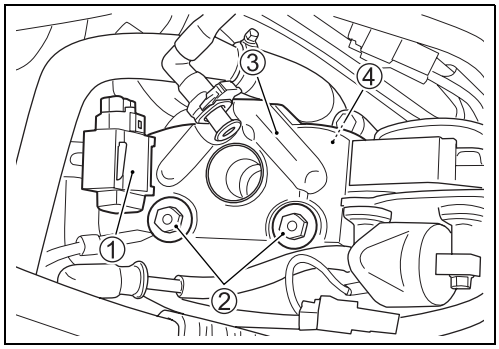

The valve clearance specification is different for both intake and exhaust valves.
Valve clearance adjustment must be checked and adjusted: 1) at the time of periodic maintenance, 2) when the valve mechanism is serviced, and 3) when the camshafts are removed for servicing.

NOTE:
** The piston must be at top dead center (TDC) on the compression stroke in order to check or adjust the valve clearance.*
** The valve clearance should only be checked when the engine is cold.*

- Drain engine oil. (☞2-16)
- Remove the TDC plug ⑤ and crankshaft hole plug ⑥.

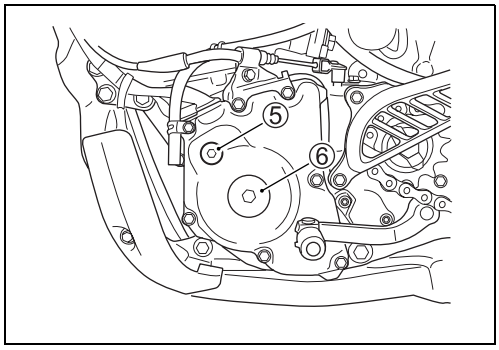

- Place a wrench over the crankshaft and turn it counterclockwise to align the TDC mark Ⓐ with the grooves Ⓑ of the timing inspection hole.

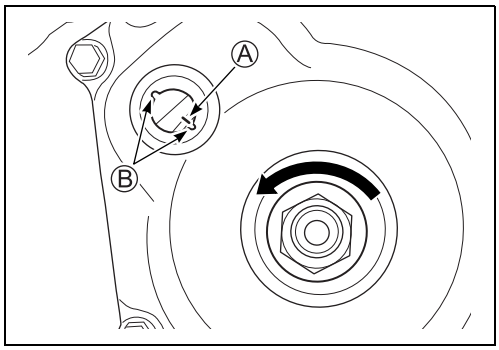

- Insert the thickness gauge between the tappet and cam. If the clearance is out of specification, adjust it to specification as follows.

TOOL 09900-20803: Thickness gauge

DATA Valve clearance (when cold):
Standard: IN. : 0.09 – 0.16 mm (0.004 – 0.006 in)
EX. : 0.17 – 0.24 mm (0.007 – 0.009 in)

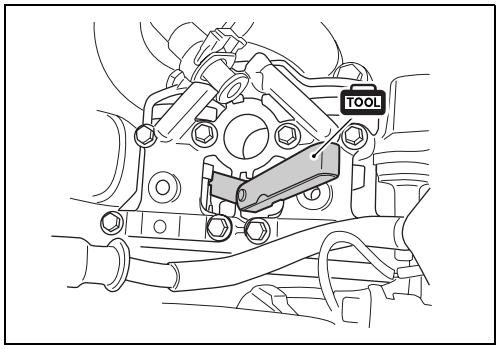

VALVE CLEARANCE ADJUSTMENT

The clearance is adjusted by replacing the existing tappet shim with a thicker or thinner one.

- Remove the intake or exhaust camshaft. (☞4-14)
- Remove the tappet ① and shim ② by fingers or magnetic hand.
- Check the figures printed on the shim. These figures indicate the thickness of the shim, as illustrated.
- Select a replacement shim that will provide a clearance within the specified range. For the purpose of this adjustment, tappet shim are available ranging from 1.200 to 2.200 mm in steps of 0.025 mm. Fit the selected shim to the valve stem end, with numbers toward tappet. Be sure to check shim size with micrometer to ensure its size. Refer to the tappet shim selection table (☞2-33, -34) for details.

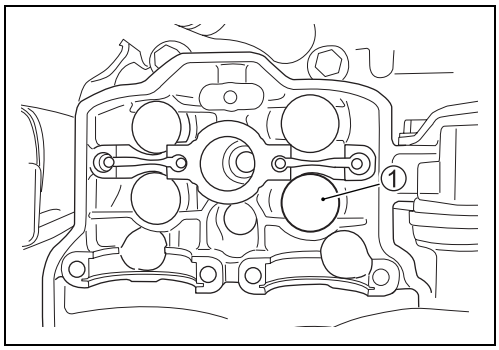

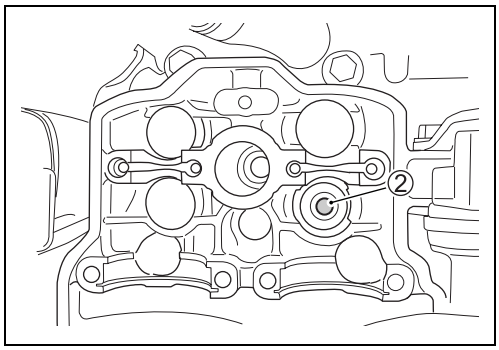

NOTE:

** Be sure to apply engine oil to tappet shim top and bottom faces.*

** When seating the tappet shim, be sure the figure printed surface faces the tappet.*

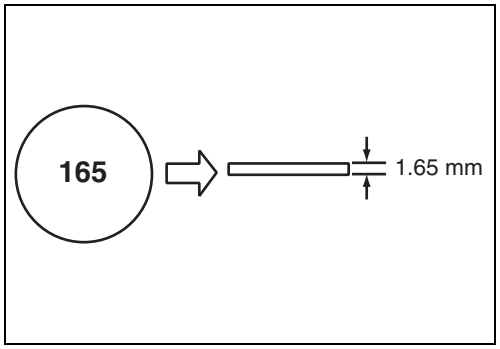

- Reinstall the intake or exhaust camshaft in the specified manner. (☞4-25)
- After replacing the tappet shim, rotate the engine so that the tappet is depressed fully. This will squeeze out oil trapped between the shim and the tappet that could cause an incorrect measurement. Then check the clearance again to confirm that it is within the specified range.

After finishing the valve clearance adjustment, reinstall the following items.

- Cylinder head cover, TO sensor (☞4-30)
- Spark plug and spark plug cap (☞2-9)
- Radiator covers and fuel tank
- TDC plug and crankshaft hole plug (☞4-29)
- Pour engine oil (☞2-16)
- Seat

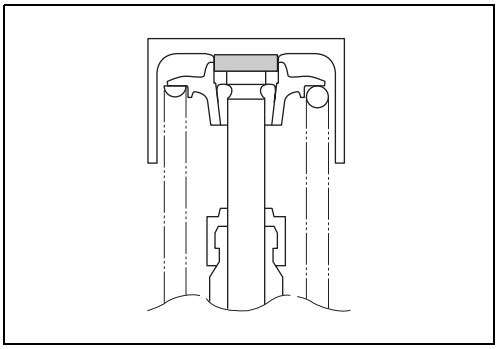

(INTAKE SIDE)

TAPPET SHIM SELECTION TABLE [INTAKE]
TAPPET SHIM NO. (12892-05C00-XXX)

TAPPET SHIM SET (12800-05850)

MEASURED VALVE CLEARANCE (mm) \ PRESENT SHIM SIZE (mm)	1.200	1.225	1.250	1.275	1.300	1.325	1.350	1.375	1.400	1.425	1.450	1.475	1.500	1.525	1.550	1.575	1.600	1.625	1.650	1.675	1.700	1.725	1.750	1.775	1.800	1.825	1.850	1.875	1.900	1.925	1.950	1.975	2.000	2.025	2.050	2.075	2.100	2.125	2.150	2.175	2.200
SUFFIX NO.	120	122	125	128	130	132	135	138	140	142	145	148	150	152	155	158	160	162	165	168	170	172	175	178	180	182	185	188	190	192	195	198	200	202	205	208	210	212	215	218	220
0.000– 0.014					1.200	1.225	1.250	1.275	1.300	1.325	1.350	1.375	1.400	1.425	1.450	1.475	1.500	1.525	1.550	1.575	1.600	1.625	1.650	1.675	1.700	1.725	1.750	1.775	1.800	1.825	1.850	1.875	1.900	1.925	1.950	1.975	2.000	2.025	2.050	2.075	2.100
0.015 – 0.039				1.200	1.225	1.250	1.275	1.300	1.325	1.350	1.375	1.400	1.425	1.450	1.475	1.500	1.525	1.550	1.575	1.600	1.625	1.650	1.675	1.700	1.725	1.750	1.775	1.800	1.825	1.850	1.875	1.900	1.925	1.950	1.975	2.000	2.025	2.050	2.075	2.100	2.125
0.040 – 0.064			1.200	1.225	1.250	1.275	1.300	1.325	1.350	1.375	1.400	1.425	1.450	1.475	1.500	1.525	1.550	1.575	1.600	1.625	1.650	1.675	1.700	1.725	1.750	1.775	1.800	1.825	1.850	1.875	1.900	1.925	1.950	1.975	2.000	2.025	2.050	2.075	2.100	2.125	2.150
0.065 – 0.089		1.200	1.225	1.250	1.275	1.300	1.325	1.350	1.375	1.400	1.425	1.450	1.475	1.500	1.525	1.550	1.575	1.600	1.625	1.650	1.675	1.700	1.725	1.750	1.775	1.800	1.825	1.850	1.875	1.900	1.925	1.950	1.975	2.000	2.025	2.050	2.075	2.100	2.125	2.150	2.175
0.090 – 0.160	SPECIFIED CLEARANCE/NO ADJUSTMENT REQUIRED																																								
0.161 – 0.185	1.250	1.275	1.300	1.325	1.350	1.375	1.400	1.425	1.450	1.475	1.500	1.525	1.550	1.575	1.600	1.625	1.650	1.675	1.700	1.725	1.750	1.775	1.800	1.825	1.850	1.875	1.900	1.925	1.950	1.975	2.000	2.025	2.050	2.075	2.100	2.125	2.150	2.175	2.200	2.200	
0.186 – 0.210	1.275	1.300	1.325	1.350	1.375	1.400	1.425	1.450	1.475	1.500	1.525	1.550	1.575	1.600	1.625	1.650	1.675	1.700	1.725	1.750	1.775	1.800	1.825	1.850	1.875	1.900	1.925	1.950	1.975	2.000	2.025	2.050	2.075	2.100	2.125	2.150	2.175	2.200	2.200		
0.211 – 0.235	1.300	1.325	1.350	1.375	1.400	1.425	1.450	1.475	1.500	1.525	1.550	1.575	1.600	1.625	1.650	1.675	1.700	1.725	1.750	1.775	1.800	1.825	1.850	1.875	1.900	1.925	1.950	1.975	2.000	2.025	2.050	2.075	2.100	2.125	2.150	2.175	2.200	2.200			
0.236 – 0.260	1.325	1.350	1.375	1.400	1.425	1.450	1.475	1.500	1.525	1.550	1.575	1.600	1.625	1.650	1.675	1.700	1.725	1.750	1.775	1.800	1.825	1.850	1.875	1.900	1.925	1.950	1.975	2.000	2.025	2.050	2.075	2.100	2.125	2.150	2.175	2.200	2.200				
0.261 – 0.285	1.350	1.375	1.400	1.425	1.450	1.475	1.500	1.525	1.550	1.575	1.600	1.625	1.650	1.675	1.700	1.725	1.750	1.775	1.800	1.825	1.850	1.875	1.900	1.925	1.950	1.975	2.000	2.025	2.050	2.075	2.100	2.125	2.150	2.175	2.200	2.200					
0.286 – 0.310	1.375	1.400	1.425	1.450	1.475	1.500	1.525	1.550	1.575	1.600	1.625	1.650	1.675	1.700	1.725	1.750	1.775	1.800	1.825	1.850	1.875	1.900	1.925	1.950	1.975	2.000	2.025	2.050	2.075	2.100	2.125	2.150	2.175	2.200	2.200						
0.311 – 0.335	1.400	1.425	1.450	1.475	1.500	1.525	1.550	1.575	1.600	1.625	1.650	1.675	1.700	1.725	1.750	1.775	1.800	1.825	1.850	1.875	1.900	1.925	1.950	1.975	2.000	2.025	2.050	2.075	2.100	2.125	2.150	2.175	2.200	2.200							
0.336 – 0.360	1.425	1.450	1.475	1.500	1.525	1.550	1.575	1.600	1.625	1.650	1.675	1.700	1.725	1.750	1.775	1.800	1.825	1.850	1.875	1.900	1.925	1.950	1.975	2.000	2.025	2.050	2.075	2.100	2.125	2.150	2.175	2.200	2.200								
0.361 – 0.385	1.450	1.475	1.500	1.525	1.550	1.575	1.600	1.625	1.650	1.675	1.700	1.725	1.750	1.775	1.800	1.825	1.850	1.875	1.900	1.925	1.950	1.975	2.000	2.025	2.050	2.075	2.100	2.125	2.150	2.175	2.200	2.200									
0.386 – 0.410	1.475	1.500	1.525	1.550	1.575	1.600	1.625	1.650	1.675	1.700	1.725	1.750	1.775	1.800	1.825	1.850	1.875	1.900	1.925	1.950	1.975	2.000	2.025	2.050	2.075	2.100	2.125	2.150	2.175	2.200	2.200										
0.411 – 0.435	1.500	1.525	1.550	1.575	1.600	1.625	1.650	1.675	1.700	1.725	1.750	1.775	1.800	1.825	1.850	1.875	1.900	1.925	1.950	1.975	2.000	2.025	2.050	2.075	2.100	2.125	2.150	2.175	2.200	2.200											
0.436 – 0.460	1.525	1.550	1.575	1.600	1.625	1.650	1.675	1.700	1.725	1.750	1.775	1.800	1.825	1.850	1.875	1.900	1.925	1.950	1.975	2.000	2.025	2.050	2.075	2.100	2.125	2.150	2.175	2.200	2.200												
0.461 – 0.485	1.550	1.575	1.600	1.625	1.650	1.675	1.700	1.725	1.750	1.775	1.800	1.825	1.850	1.875	1.900	1.925	1.950	1.975	2.000	2.025	2.050	2.075	2.100	2.125	2.150	2.175	2.200	2.200													
0.486 – 0.510	1.575	1.600	1.625	1.650	1.675	1.700	1.725	1.750	1.775	1.800	1.825	1.850	1.875	1.900	1.925	1.950	1.975	2.000	2.025	2.050	2.075	2.100	2.125	2.150	2.175	2.200	2.200														
0.511 – 0.535	1.600	1.625	1.650	1.675	1.700	1.725	1.750	1.775	1.800	1.825	1.850	1.875	1.900	1.925	1.950	1.975	2.000	2.025	2.050	2.075	2.100	2.125	2.150	2.175	2.200	2.200															
0.536 – 0.560	1.625	1.650	1.675	1.700	1.725	1.750	1.775	1.800	1.825	1.850	1.875	1.900	1.925	1.950	1.975	2.000	2.025	2.050	2.075	2.100	2.125	2.150	2.175	2.200	2.200																
0.602 – 0.626	1.650	1.675	1.700	1.725	1.750	1.775	1.800	1.825	1.850	1.875	1.900	1.925	1.950	1.975	2.000	2.025	2.050	2.075	2.100	2.125	2.150	2.175	2.200	2.200																	
0.627 – 0.651	1.675	1.700	1.725	1.750	1.775	1.800	1.825	1.850	1.875	1.900	1.925	1.950	1.975	2.000	2.025	2.050	2.075	2.100	2.125	2.150	2.175	2.200	2.200																		
0.652 – 0.676	1.700	1.725	1.750	1.775	1.800	1.825	1.850	1.875	1.900	1.925	1.950	1.975	2.000	2.025	2.050	2.075	2.100	2.125	2.150	2.175	2.200	2.200																			
0.677 – 0.701	1.725	1.750	1.775	1.800	1.825	1.850	1.875	1.900	1.925	1.950	1.975	2.000	2.025	2.050	2.075	2.100	2.125	2.150	2.175	2.200	2.200																				

HOW TO USE THIS CHART:

I. Measure valve clearance. “ENGINE IS COLD”
II. Measure present shim size.
III. Match clearance in vertical column with present shim size in horizontal column.

EXAMPLE

Valve clearance is	0.180 mm
Present shim size	1.650 mm
Shim size to be used	1.700 mm

(EXHAUST SIDE)

TAPPET SHIM SELECTION TABLE [EXHAUST]
TAPPET SHIM NO. (12892-05C00-XXX)

TAPPET SHIM SET (12800-05850)

MEASURED VALVE CLEARANCE (mm) \ PRESENT SHIM SIZE (mm)	1.200	1.225	1.250	1.275	1.300	1.325	1.350	1.375	1.400	1.425	1.450	1.475	1.500	1.525	1.550	1.575	1.600	1.625	1.650	1.675	1.700	1.725	1.750	1.775	1.800	1.825	1.850	1.875	1.900	1.925	1.950	1.975	2.000	2.025	2.050	2.075	2.100	2.125	2.150	2.175	2.200
SUFFIX NO.	120	122	125	128	130	132	135	138	140	142	145	148	150	152	155	158	160	162	165	168	170	172	175	178	180	182	185	188	190	192	195	198	200	202	205	208	210	212	215	218	220
0.000 – 0.019								1.200	1.225	1.250	1.275	1.300	1.325	1.350	1.375	1.400	1.425	1.450	1.475	1.500	1.525	1.550	1.575	1.600	1.625	1.650	1.675	1.700	1.725	1.750	1.775	1.800	1.825	1.850	1.875	1.900	1.925	1.950	1.975	2.000	2.025
0.020 – 0.044							1.200	1.225	1.250	1.275	1.300	1.325	1.350	1.375	1.400	1.425	1.450	1.475	1.500	1.525	1.550	1.575	1.600	1.625	1.650	1.675	1.700	1.725	1.750	1.775	1.800	1.825	1.850	1.875	1.900	1.925	1.950	1.975	2.000	2.025	2.050
0.045 – 0.069						1.200	1.225	1.250	1.275	1.300	1.325	1.350	1.375	1.400	1.425	1.450	1.475	1.500	1.525	1.550	1.575	1.600	1.625	1.650	1.675	1.700	1.725	1.750	1.775	1.800	1.825	1.850	1.875	1.900	1.925	1.950	1.975	2.000	2.025	2.050	2.075
0.070 – 0.094					1.200	1.225	1.250	1.275	1.300	1.325	1.350	1.375	1.400	1.425	1.450	1.475	1.500	1.525	1.550	1.575	1.600	1.625	1.650	1.675	1.700	1.725	1.750	1.775	1.800	1.825	1.850	1.875	1.900	1.925	1.950	1.975	2.000	2.025	2.050	2.075	2.100
0.095 – 0.119				1.200	1.225	1.250	1.275	1.300	1.325	1.350	1.375	1.400	1.425	1.450	1.475	1.500	1.525	1.550	1.575	1.600	1.625	1.650	1.675	1.700	1.725	1.750	1.775	1.800	1.825	1.850	1.875	1.900	1.925	1.950	1.975	2.000	2.025	2.050	2.075	2.100	2.125
0.120 – 0.144			1.200	1.225	1.250	1.275	1.300	1.325	1.350	1.375	1.400	1.425	1.450	1.475	1.500	1.525	1.550	1.575	1.600	1.625	1.650	1.675	1.700	1.725	1.750	1.775	1.800	1.825	1.850	1.875	1.900	1.925	1.950	1.975	2.000	2.025	2.050	2.075	2.100	2.125	2.150
0.145 – 0.169		1.200	1.225	1.250	1.275	1.300	1.325	1.350	1.375	1.400	1.425	1.450	1.475	1.500	1.525	1.550	1.575	1.600	1.625	1.650	1.675	1.700	1.725	1.750	1.775	1.800	1.825	1.850	1.875	1.900	1.925	1.950	1.975	2.000	2.025	2.050	2.075	2.100	2.125	2.150	2.175
0.170 – 0.240	SPECIFIED CLEARANCE/NO ADJUSTMENT REQUIRED																																								
0.241 – 0.265	1.250	1.275	1.300	1.325	1.350	1.375	1.400	1.425	1.450	1.475	1.500	1.525	1.550	1.575	1.600	1.625	1.650	1.675	1.700	1.725	1.750	1.775	1.800	1.825	1.850	1.875	1.900	1.925	1.950	1.975	2.000	2.025	2.050	2.075	2.100	2.125	2.150	2.175	2.200	2.200	
0.266 – 0.290	1.275	1.300	1.325	1.350	1.375	1.400	1.425	1.450	1.475	1.500	1.525	1.550	1.575	1.600	1.625	1.650	1.675	1.700	1.725	1.750	1.775	1.800	1.825	1.850	1.875	1.900	1.925	1.950	1.975	2.000	2.025	2.050	2.075	2.100	2.125	2.150	2.175	2.200	2.200		
0.291 – 0.315	1.300	1.325	1.350	1.375	1.400	1.425	1.450	1.475	1.500	1.525	1.550	1.575	1.600	1.625	1.650	1.675	1.700	1.725	1.750	1.775	1.800	1.825	1.850	1.875	1.900	1.925	1.950	1.975	2.000	2.025	2.050	2.075	2.100	2.125	2.150	2.175	2.200	2.200			
0.316 – 0.340	1.325	1.350	1.375	1.400	1.425	1.450	1.475	1.500	1.525	1.550	1.575	1.600	1.625	1.650	1.675	1.700	1.725	1.750	1.775	1.800	1.825	1.850	1.875	1.900	1.925	1.950	1.975	2.000	2.025	2.050	2.075	2.100	2.125	2.150	2.175	2.200	2.200				
0.341– 0.365	1.350	1.375	1.400	1.425	1.450	1.475	1.500	1.525	1.550	1.575	1.600	1.625	1.650	1.675	1.700	1.725	1.750	1.775	1.800	1.825	1.850	1.875	1.900	1.925	1.950	1.975	2.000	2.025	2.050	2.075	2.100	2.125	2.150	2.175	2.200	2.200					
0.366 – 0.390	1.375	1.400	1.425	1.450	1.475	1.500	1.525	1.550	1.575	1.600	1.625	1.650	1.675	1.700	1.725	1.750	1.775	1.800	1.825	1.850	1.875	1.900	1.925	1.950	1.975	2.000	2.025	2.050	2.075	2.100	2.125	2.150	2.175	2.200	2.200						
0.391 – 0.415	1.400	1.425	1.450	1.475	1.500	1.525	1.550	1.575	1.600	1.625	1.650	1.675	1.700	1.725	1.750	1.775	1.800	1.825	1.850	1.875	1.900	1.925	1.950	1.975	2.000	2.025	2.050	2.075	2.100	2.125	2.150	2.175	2.200	2.200							
0.416 – 0.440	1.425	1.450	1.475	1.500	1.525	1.550	1.575	1.600	1.625	1.650	1.675	1.700	1.725	1.750	1.775	1.800	1.825	1.850	1.875	1.900	1.925	1.950	1.975	2.000	2.025	2.050	2.075	2.100	2.125	2.150	2.175	2.200	2.200								
0.441 – 0.465	1.450	1.475	1.500	1.525	1.550	1.575	1.600	1.625	1.650	1.675	1.700	1.725	1.750	1.775	1.800	1.825	1.850	1.875	1.900	1.925	1.950	1.975	2.000	2.025	2.050	2.075	2.100	2.125	2.150	2.175	2.200	2.200									
0.466 – 0.490	1.475	1.500	1.525	1.550	1.575	1.600	1.625	1.650	1.675	1.700	1.725	1.750	1.775	1.800	1.825	1.850	1.875	1.900	1.925	1.950	1.975	2.000	2.025	2.050	2.075	2.100	2.125	2.150	2.175	2.200	2.200										
0.491 – 0.515	1.500	1.525	1.550	1.575	1.600	1.625	1.650	1.675	1.700	1.725	1.750	1.775	1.800	1.825	1.850	1.875	1.900	1.925	1.950	1.975	2.000	2.025	2.050	2.075	2.100	2.125	2.150	2.175	2.200	2.200											
0.516 – 0.540	1.525	1.550	1.575	1.600	1.625	1.650	1.675	1.700	1.725	1.750	1.775	1.800	1.825	1.850	1.875	1.900	1.925	1.950	1.975	2.000	2.025	2.050	2.075	2.100	2.125	2.150	2.175	2.200	2.200												
0.541 – 0.565	1.550	1.575	1.600	1.625	1.650	1.675	1.700	1.725	1.750	1.775	1.800	1.825	1.850	1.875	1.900	1.925	1.950	1.975	2.000	2.025	2.050	2.075	2.100	2.125	2.150	2.175	2.200	2.200													
0.566 – 0.590	1.575	1.600	1.625	1.650	1.675	1.700	1.725	1.750	1.775	1.800	1.825	1.850	1.875	1.900	1.925	1.950	1.975	2.000	2.025	2.050	2.075	2.100	2.125	2.150	2.175	2.200	2.200														
0.591 – 0.615	1.600	1.625	1.650	1.675	1.700	1.725	1.750	1.775	1.800	1.825	1.850	1.875	1.900	1.925	1.950	1.975	2.000	2.025	2.050	2.075	2.100	2.125	2.150	2.175	2.200	2.200															
0.616 – 0.640	1.625	1.650	1.675	1.700	1.725	1.750	1.775	1.800	1.825	1.850	1.875	1.900	1.925	1.950	1.975	2.000	2.025	2.050	2.075	2.100	2.125	2.150	2.175	2.200	2.200																
0.641 – 0.665	1.650	1.675	1.700	1.725	1.750	1.775	1.800	1.825	1.850	1.875	1.900	1.925	1.950	1.975	2.000	2.025	2.050	2.075	2.100	2.125	2.150	2.175	2.200	2.200																	

HOW TO USE THIS CHART:

I. Measure valve clearance. “ENGINE IS COLD”
II. Measure present shim size.
III. Match clearance in vertical column with present shim size in horizontal column.

EXAMPLE

Valve clearance is	0.250 mm
Present shim size	1.650 mm
Shim size to be used	1.700 mm

CYLINDER HEAD, CYLINDER AND PISTON

CYLINDER HEAD INSPECTION

- Remove the cylinder head. (☞4-16)
- Decarbonize the combustion chamber.
- Inspect for pinholes, cracks and other damage.
- If any defects are found, replace the cylinder head with a new one.

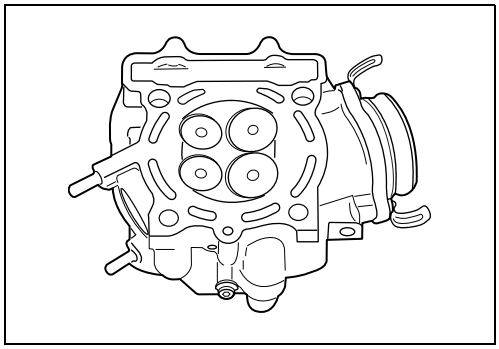

CYLINDER INSPECTION

- Remove the cylinder. (☞4-18)
- Inspect the cylinder wall for any scratches, nicks or other damage.
- If any defects are found, replace the cylinder with a new one.

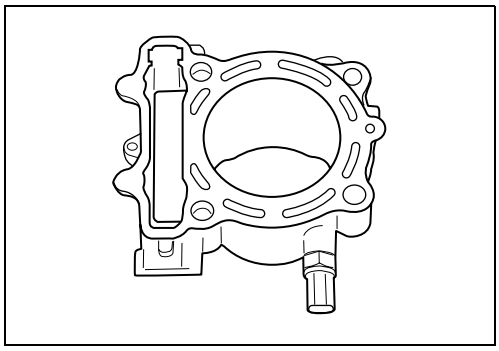

PISTON AND PISTON RING REPLACEMENT

- Replace the piston and piston rings. (☞4-19)

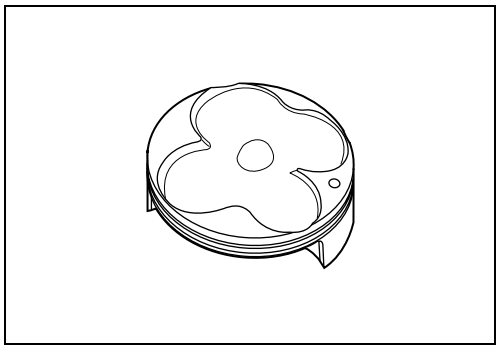

MUFFLER SILENCER

SILENCER INSPECTION AND REPLACEMENT

- Remove the rear muffler body mounting bolts ①.

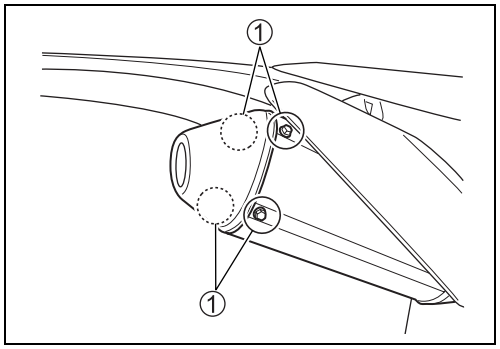

- Remove the rear muffler body ② and muffler tail pipe ③.

NOTE:
Be careful not to damage the rear muffler body ② and muffler tail pipe ③.

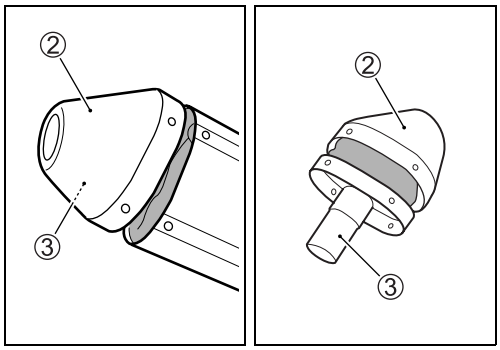

- Remove the muffler silencer ④, muffler front glass wool ⑤ and muffler tail glass wool ⑥.
- Inspect the muffler silencer ④ and glass wools (⑤, ⑥) for clogging with carbon deposit or tar.
- If necessary, replace the muffler silencer or glass wool with a new one.
- Install the muffler front glass wool ⑤, muffler silencer ④ and muffler tail glass wool ⑥.

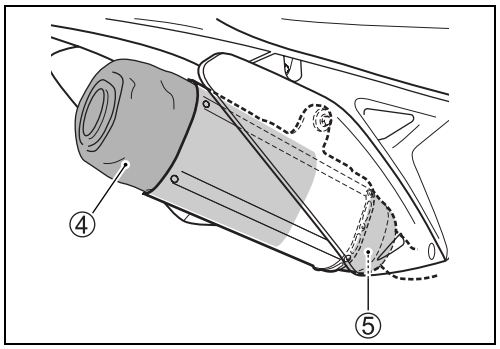

- Apply bond to the circumference of the rear muffler body ②.

1207B 99000-31140: SUZUKI BOND "1207B" or equivalent

- Insert the rear muffler body ② and muffler tail pipe ③ into the muffler body with aligning each hole.
- Tighten the rear muffler body mounting bolts to the specified torque.

Rear muffler body mounting bolt: 10 N·m (1.0 kgf-m, 7.0 lbf-ft)

NOTE:
After assembling the muffler, inspect the exhaust gas leakage.

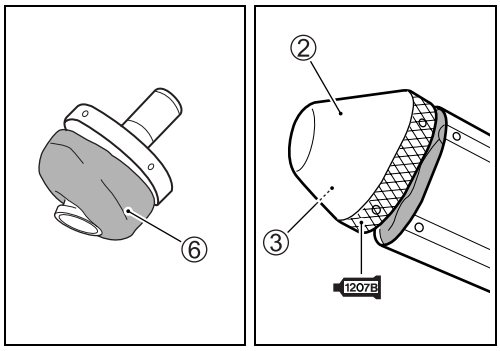

DRIVE CHAIN AND SPROCKETS

DRIVE CHAIN SLACK

- Place the motorcycle on a block to lift the rear wheel off the ground.
- Inspect the drive chain slack at the middle point between the drive chain buffer and rear sprocket.

DATA Drive chain slack Ⓐ: 35 – 45 mm (1.4 – 1.8 in)

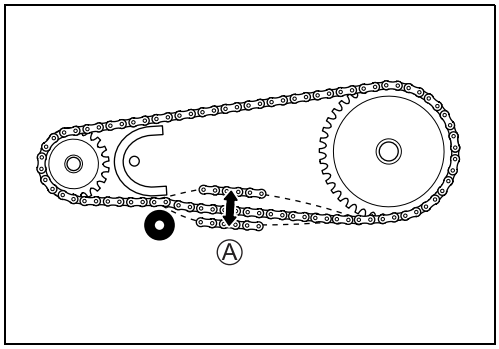

CRANKCASE DRIVESHAFT OIL SEAL

- Remove the engine sprocket. (☞4-6)
- Remove the bolts ① and oil seal retainer ②.
- Inspect the oil seal ③ for abnormality (dust, stone or foreign materials).
- If necessary, replace it with a new one.

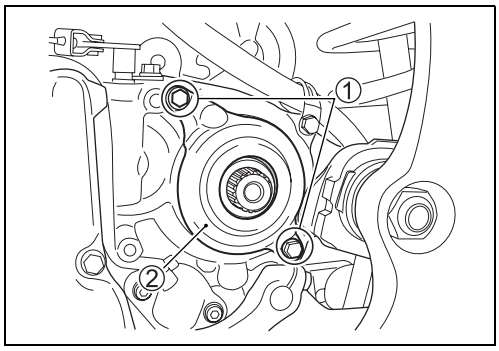

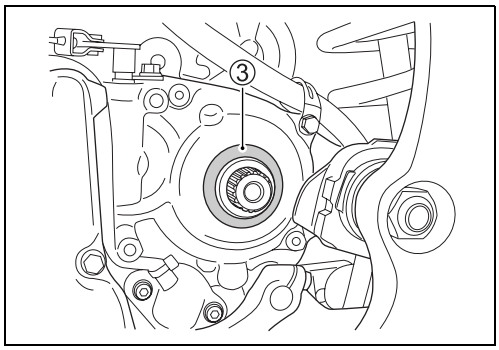

DRIVE CHAIN ADJUSTMENT

- Loosen the axle nut ①.
- Loosen the lock-nuts ② and adjust the drive chain slack to the specification by turning the adjusters ③. Make sure that the right and left adjuster washers ④ are at the same position on scales ⑤.
- With the adjusters ③ held in position, tighten the lock-nuts ②.
- Push the adjuster washers ④ to the adjusters ③ and tighten the axle nut ①.

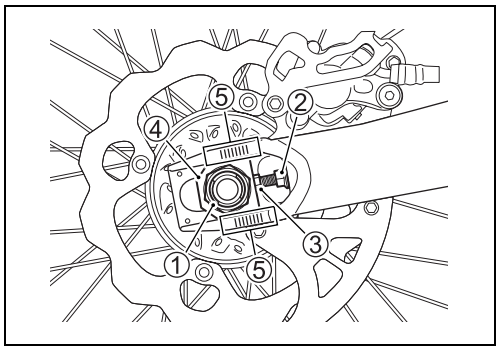

Rear axle nut: 100 N·m (10.0 kgf-m, 72.5 lbf-ft)

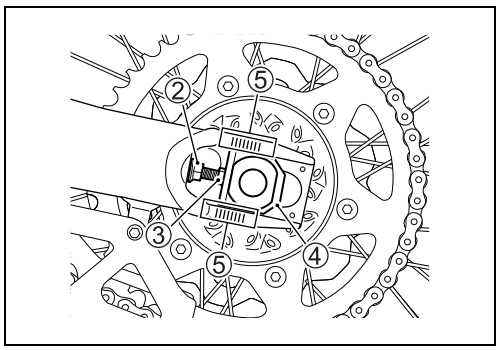

20TH PITCH LENGTH

Pull the drive chain tight and measure the 20th pitch length.

DATA Drive chain 20th pitch length
Service limit: 323.8 mm (12.75 in)

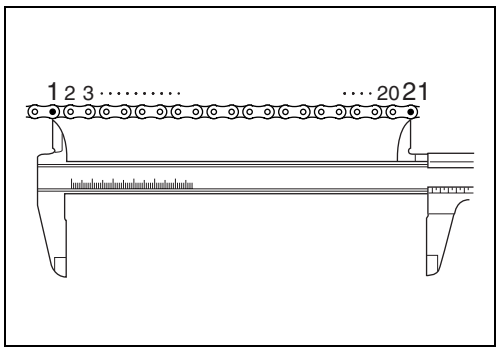

DRIVE CHAIN CLEANING AND LUBRICATION

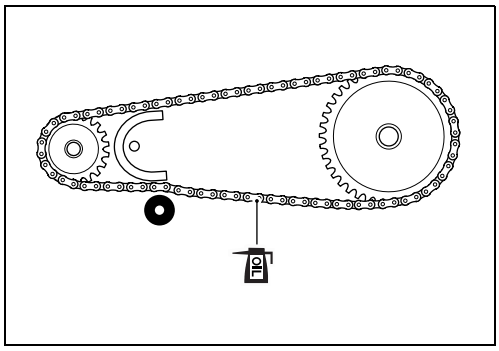

- Remove dirt and dust from the drive chain.
- Clean the drive chain with a drive chain cleaner, or water and mild detergent.

NOTICE
Cleaning the drive chain improperly can ruin the drive chain. *** Do not use a volatile solvent such as paint thinner, kerosene and gasoline.** *** Do not use high pressure cleaner to clean the drive chain.** *** Do not use wire brush to clean the drive chain.**

- Use a soft brush to clean the drive chain.
- Wipe off water and neutral detergent.
- Lubricate with a motorcycle drive chain lubricant or high viscosity oil.
- Lubricate both front and back plates of the drive chain.
- Wipe off excess lubricant after lubricating all around of the drive chain.

SPROCKET INSPECTION

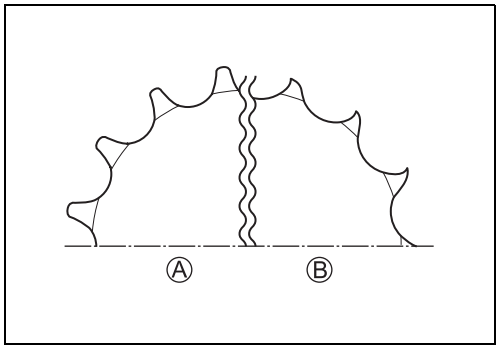

- Inspect the engine sprocket and rear sprocket for wear and cracks. Replace the sprockets as necessary.

NOTE:
When replacing a worn sprocket, it is likely that the drive chain will need to be replaced as well.

Ⓐ Normal wear
Ⓑ Excessive wear

- Check the engine sprocket bolt for looseness.
  If necessary, tighten the engine sprocket bolt. (☞4-10)

DRIVE CHAIN GUIDE, BUFFER AND TENSIONER ROLLER

DRIVE CHAIN GUIDE INSPECTION

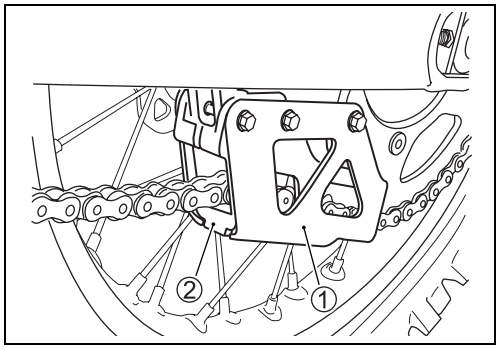

- Inspect the drive chain guide ① for bends and damage.

NOTE:
The drive chain can hit a bent guide causing noise and drive chain wear.

- Inspect the chain guide defense ② for wear.
- If necessary, replace the defective parts with a new one.

DRIVE CHAIN BUFFER AND ROLLER INSPECTION

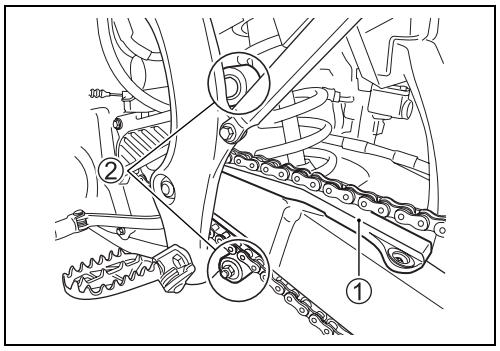

- Inspect the drive chain buffer ① for wear and cracks.
- Inspect the drive chain rollers ② for wear.
- If necessary, replace the defective parts with a new one.

NOTE:
The drive chain can touch the swingarm directly if the drive chain buffer is worn out. This will cause drive chain and swingarm damage.

- Inspect the drive chain roller bolt and nut for tightness.

Drive chain roller bolt and nut:
23 N·m (2.3 kgf-m, 16.5 lbf-ft)

BRAKES

BRAKE FLUID LEVEL

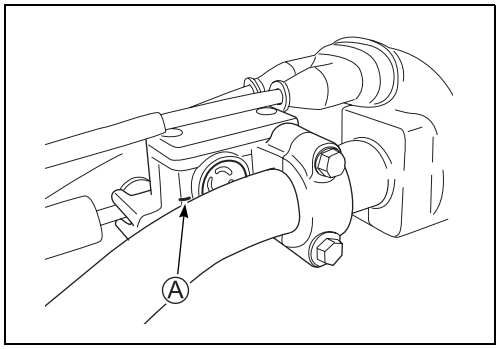

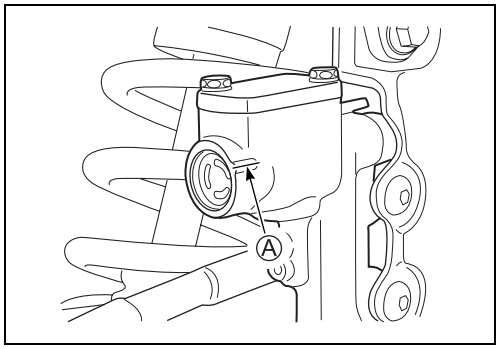

- Inspect the brake fluid level in both front and rear reservoirs. If the brake fluid level is lower than LOWER mark Ⓐ, replenish the reservoir with the specified brake fluid to the UPPER line. Inspect brake pad wear and brake fluid leakage if the brake fluid level decreases.

Brake fluid: DOT 4

⚠ WARNING

Brake fluid can be hazardous to humans and pets. Brake fluid is harmful or fatal if swallowed, and harmful if it comes in contact with your skin or eyes.

Keep brake fluid away from children. Call your doctor immediately if brake fluid is swallowed, and induce vomiting. Flush eyes or skin with water if brake fluid gets in eyes or comes in contact with skin.

⚠ WARNING

The use of any fluid except DOT 4 brake fluid from a sealed container can damage the brake system and lead to an accident.

Clean reservoir cap before removing. Use only DOT 4 brake fluid from a sealed container. Never use or mix different types of brake fluid.

NOTICE

Spilled brake fluid can damage painted surfaces and plastic parts.

Be careful not to spill any fluid when filling the brake fluid reservoir. Wipe spilled fluid up immediately.

FRONT BRAKE CALIPER AXLE BOLT

- Remove the brake caliper. (☞4-67)
- Check that the brake caliper axle bolts (caliper ①, bracket ②) are tightened their specified torque. If they are loose, tighten to the specified torque.

Front brake caliper axle bolt

(Caliper): 25 N·m (2.5 kgf-m, 18.0 lbf-ft)
(Bracket): 28 N·m (2.8 kgf-m, 20.0 lbf-ft)

- Install the brake caliper. (☞4-68)
- Refill brake fluid and bleed air from the brake system. (☞4-62)

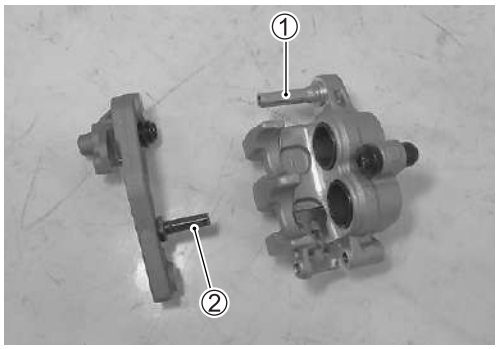

BRAKE PAD

- Inspect the brake pads for wear. If the brake pads are worn, replace them with new ones. (☞4-65)

Ⓐ Wear limit

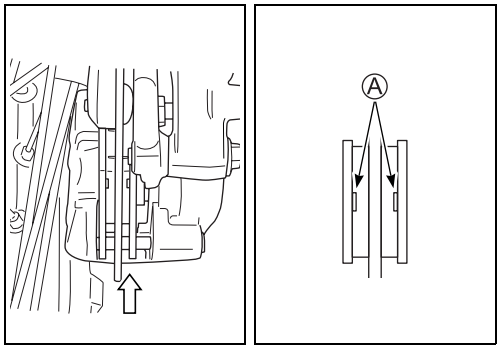

NOTE:

** Pump the brake lever and pedal several times to restore the brake pads after replacing the brake pads.*

** Replace both right and left pads together when replacing the brake pads.*

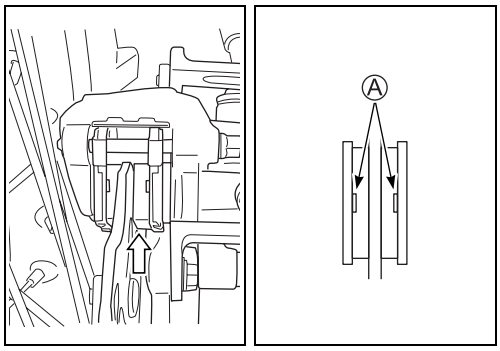

FRONT BRAKE LEVER ADJUSTMENT

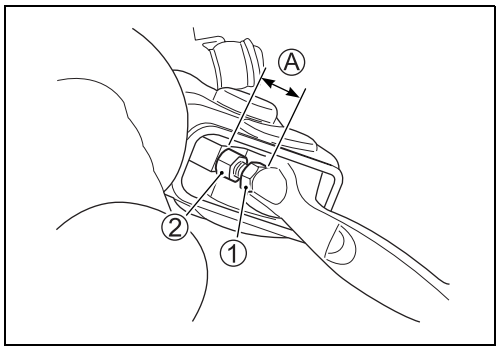

Adjust the brake lever position as follows:

- Loosen the lock-nut ①.
- Turn in or out adjuster ② to obtain the proper brake lever position.
- The standard adjuster length Ⓐ is from 11 – 15 mm (0.4 – 0.6 in).
- Tighten the lock-nut ①.

DATA Adjuster length Ⓐ: 11 – 15 mm (0.4 – 0.6 in)

BRAKE PEDAL HEIGHT ADJUSTMENT

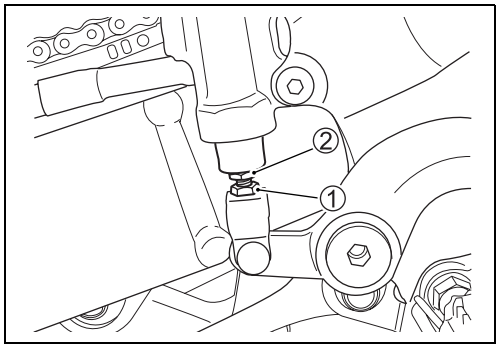

Adjust the rear brake pedal height as follows:

- Loosen the lock-nut ①.
- Adjust the brake pedal height Ⓐ by turning the adjuster ② to locate the pedal 0 – 10 mm (0 – 0.4 in) below the top face of the footrest.
- Tighten the lock-nut ①.

DATA Brake pedal height Ⓐ: 0 – 10 mm (0 – 0.4 in)

Rear brake master cylinder rod lock-nut:
6 N·m (0.6 kgf-m, 4.5 lbf-ft)

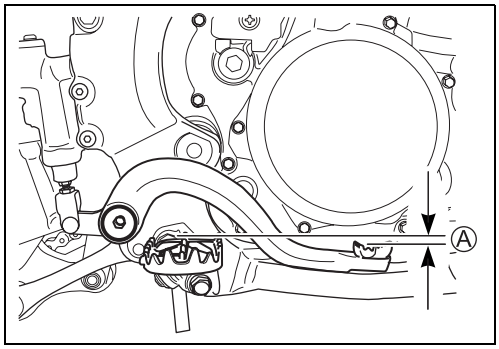

FRONT FORK

- Inspect the inner tube for dirt or dust. If any dirt or dust is found, clean the inner tube.
- Remove the front fork protectors. (☞4-73)
- Remove the dust seals ① and scraper ②.

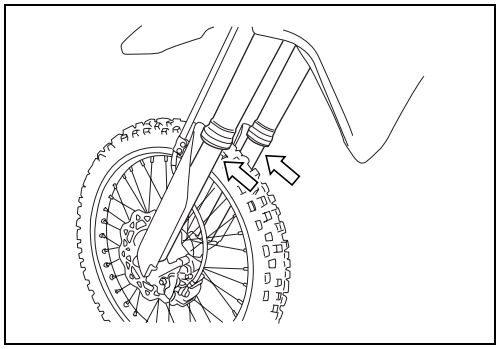

NOTICE
Scratches on the inner tube could cause oil leaks. **Avoid scratching when removing.**

- Clean the dirt between dust seals ① and oil seals ③.
- Apply fork oil to the inner tubes.
- Reinstall the scraper ②, dust seals ① and front fork protectors.

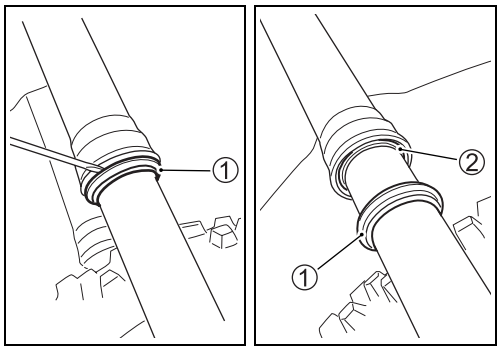

- Move the front fork up and down several times and inspect for smooth movement.
- Inspect for damage and oil or air leaks.
- If any defects are found, replace the defective part with a new one. (☞4-74)
- Inspect the bolts and nuts for tightness.

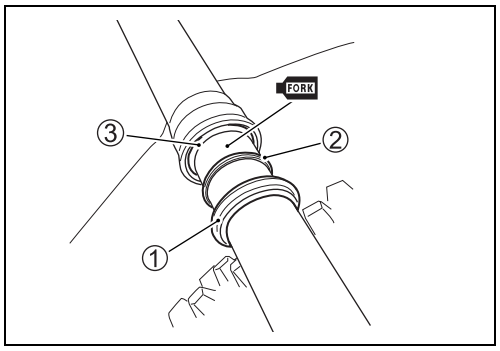

- Place a stand under the chassis tube to lift the front wheel off the ground.
- Remove the air valve caps.
- Check and adjust each air pressure. (☞3-11)
- Install the air valve caps.

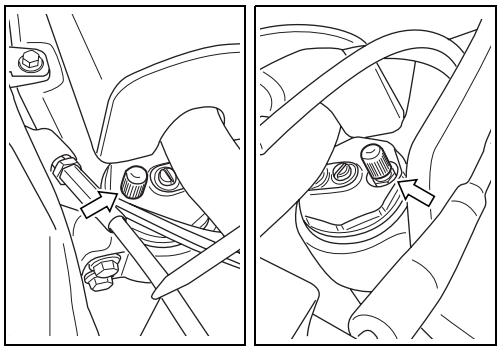

FRONT FORK OIL CHANGE

- Change front fork oil. (☞3-10)

REAR SUSPENSION

- Move the rear suspension up and down several times and inspect for smooth movement.
- Inspect for damage and oil leaks.
- Inspect the bolts and nuts for tightness.
- Inspect that the rear suspension has play or binds by moving the swingarm up and down, and right and left.
- If necessary, replace the defective parts with a new one.

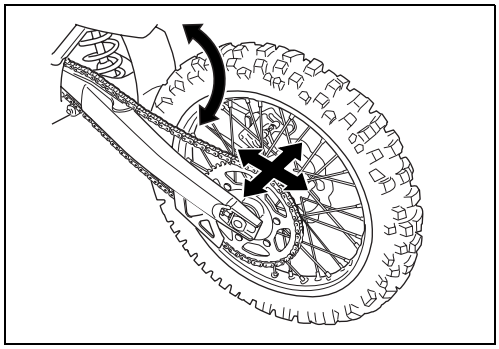

WHEELS AND TIRES

WHEEL RIM AND TIRES INSPECTION

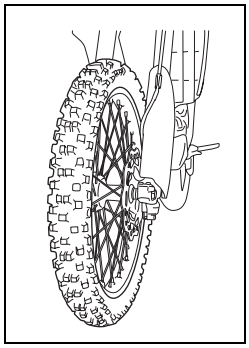

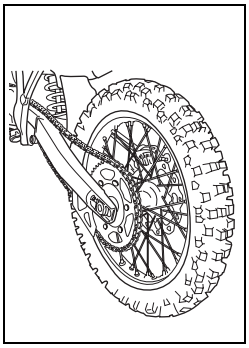

- Inspect the wheel and tires for damage.
- Inspect the wheel bearing for rattles. (☞4-56)
- Inspect the wheel rim runout. (☞4-56)
- If necessary, replace the defective parts with a new one.

SPOKE NIPPLE AND RIM LOCK INSPECTION

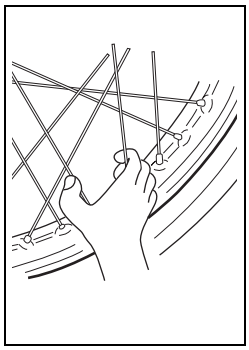

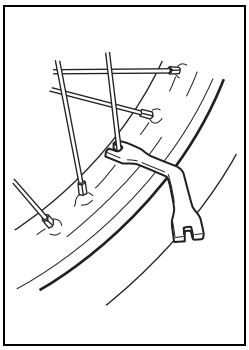

- Inspect the spokes for tension by squeezing the spoke nipples.
- Retighten the spoke nipples with a spoke nipple wrench so as all spokes have same tension.

Spoke nipple: 6 N·m (0.6 kgf-m, 4.5 lbf-ft)

NOTICE
Improperly tightening the spoke nipples can damage the wheel. **Tighten the spoke nipples less than 1/2 turn at a time. Inspect the spoke tension and then retighten the spoke nipple.**

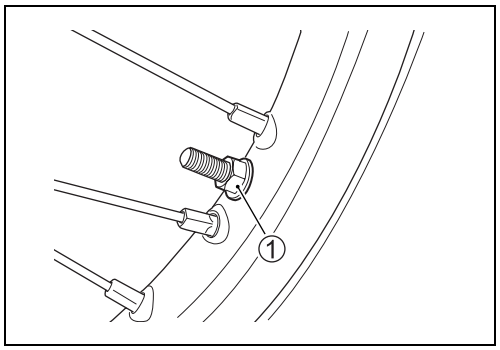

- Inspect the rim lock ① for tightness.

Front wheel rim lock: 14 N·m (1.4 kgf-m, 10.0 lbf-ft)

Rear wheel rim lock: 17 N·m (1.7 kgf-m, 12.5 lbf-ft)

TIRE PRESSURE

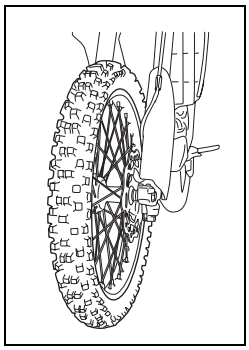

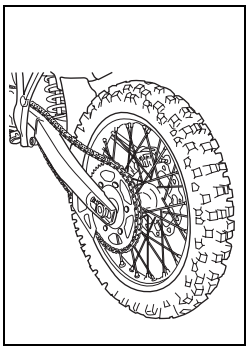

- Inspect front and rear tire pressure.

DATA **Tire pressure (cold): 70 – 110 kPa**
(0.7 – 1.1 kgf/cm², 10 – 16 psi)

STEERING

- Inspect the steering by moving the front forks up and down, and back and forward. If the steering has play or binds, inspect steering stem head nut tightness and steering bearings. (☞4-94, -95)

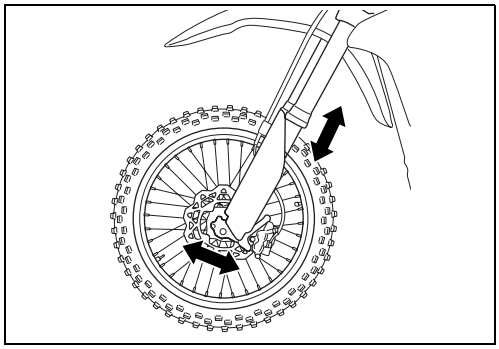

FRAME

- Inspect the frame periodically.

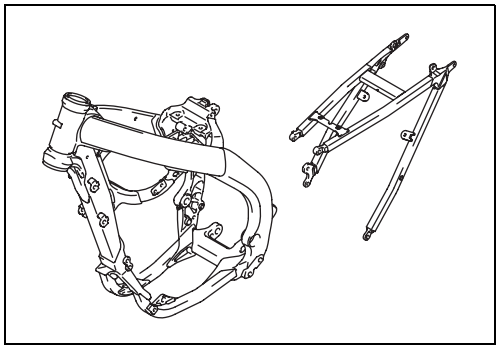

SWINGARM

- Inspect the swingarm periodically.

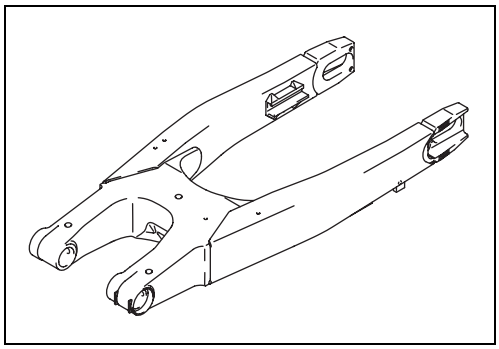

FUEL TANK

- Inspect the fuel tank for fuel ooze and leak from welded portions.

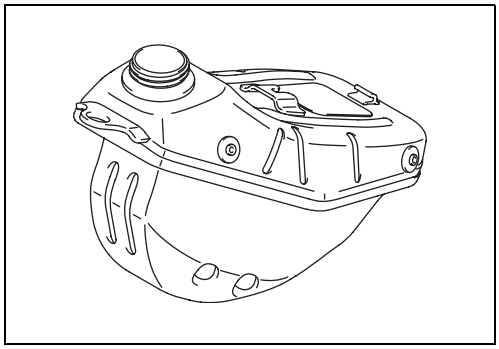

LUBRICATION

Apply grease or oil to the moving parts to increase durability and prevent wear.

No.	ITEM	LUBRICANT	FREQUENCY	COMMENTS
①	Clutch cable, lever	A	Pre-race and between every race	Run oil through cables until it exits the lower end. Lube the cable ends where they pivot.
②	Throttle grip, throttle case	C	Pre-race	Lightly grease the inside of throttle cable spool. Keep free from dirt.
	Throttle cable	A		
③	Rear brake pedal	C	Every 1 race/More often according to conditions	Grease the brake pedal pivot.
④	Swingarm	C	Every 3 races/More often according to conditions	Clean and pack the bearings. Keep seals fresh. Grease the seals.
⑤	Rear suspension linkage pivot points	C	Every 1 race/More often according to conditions	Clean and pack the bearings. Keep seals fresh. Grease the seals.
⑥	Steering stem bearings	C	Every 5 races/More often according to conditions	Clean and pack the bearings. Keep seals fresh.
⑦	Kick starter lever	C	Pre-race	Grease the kick starter lever pivot.
⑧	Starter/idle adjuster shaft	A	Pre-race	Lightly oil the plunger shaft.
⑨	Drive chain	B	Pre-race and between every race	Keep chain thoroughly lobed at all times. Always check wear and alignment.
⑩	Cushion lever, cushion rod	C	Every 1 race/More often according to conditions	Grease the bearing and seals.
⑪	Front and rear wheels	C	Every 1 race/More often according to conditions	Grease the bearing and seals.

The following materials are necessary:

A. Lightweight oil such as WD-40 or penetrating oil

B. Aerosol type Chain Lube

C. SUZUKI SUPER GREASE “A” or equivalent, or SUZUKI WATER RESISTANT GREASE EP2 or equivalent

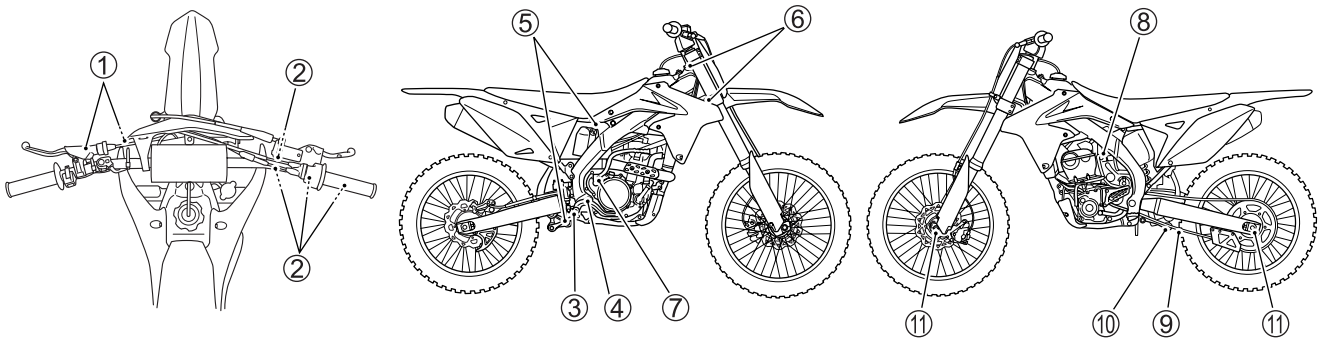

Follow the schedule closely. The disassembly necessary to lubricate many components is in itself valuable preventative maintenance. It allows you to inspect for wear, fatigue, adjustment and fastener tightness and it allows you to clean out the grit which otherwise cannot be gotten out.

MACHINE TUNING

CONTENTS

SELECTION OF ECM TUNING MAP

In the ECM of this model, there are three different maps provided, a standard map and two modified maps (injection map for slightly leaner mixture and that for slightly richer mixture).
Select the appropriate short wire among those that come supplied with the motorcycle and connect it to the mode select coupler. This can change the ECM setting to the modified map (either injection map for slightly leaner mixture or that for slightly richer mixture depending on the selected short wire).

	Coupler color	Injection map
①	White	Lean
②	Gray	Rich
	–	STD

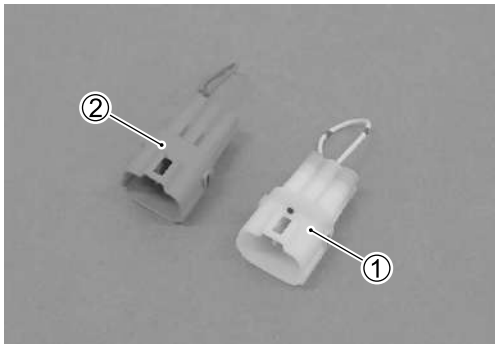

NOTE:
The changeover is executed immediately after the engine has been started.

- Select White short wire (map for slightly leaner mixture) when:
  1) Raining
  2) In high humidity
- Select Gray short wire (map for slightly richer mixture) when:
  1) In low humidity
  2) At continuous high speed

NOTE:
The above information is provided only as a guide. To determine the setting, make sure to check also for drivability and spark plug firing end condition.

SHORT WIRE CONNECTING PROCEDURE

- Remove the mode select coupler ② from the bracket ①.

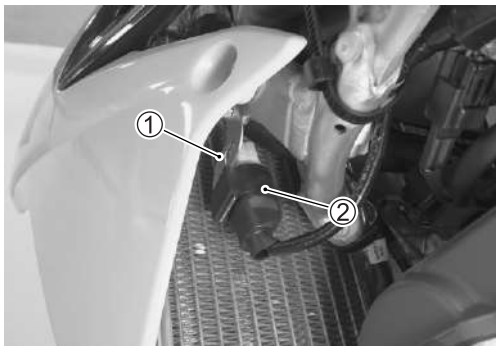

- Disconnect the mode select coupler cap ③.

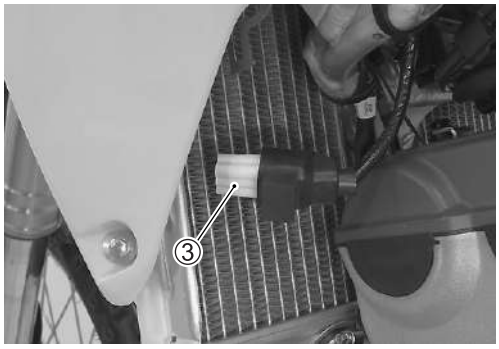

- Connect the short wire ④ to the mode select coupler ②.

NOTICE
Improper mode select coupler can damage system. **Keep dry when connecting the coupler.**

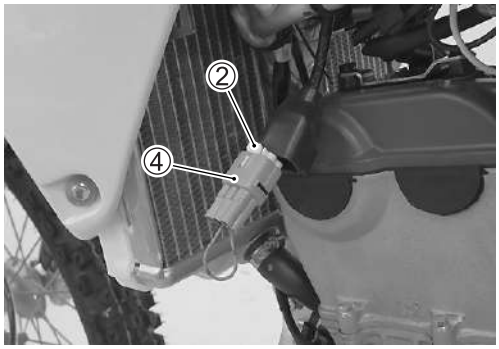

- Install the mode select coupler ② to the bracket ①.
- Start the engine.

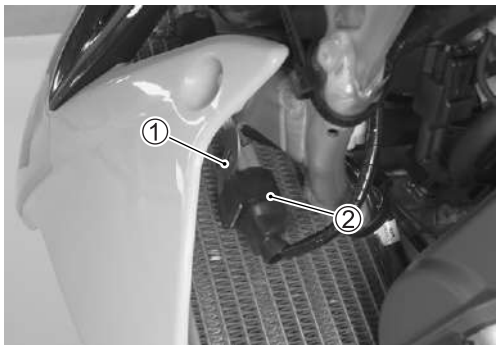

SELECTION OF S-HAC (SUZUKI HOLESHOT ASSIST CONTROL) MAP

S-HAC is a function that controls engine characteristics when starting a race using a starting gate ①.
One of three different modes (maps) can be selected for engine control.

NOTE:
S-HAC performs control intended specifically for starts that use a starting gate.
Do not use S-HAC for a start that does not use a starting gate.

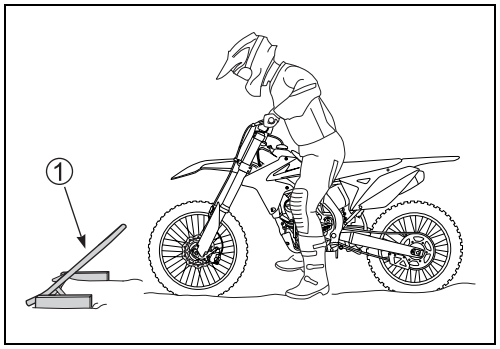

S-HAC MAP

Map (Indicator light)	Use for
Standard map (Unlit)	–
A-map (slow flashing)	Hard & dry dirt, or concrete base
B-map (fast flashing)	Normal dirt

Engine control release conditions

Selected map	Engine control release conditions
A-map or B-map	Control released 6 seconds after starting begins.
	Control released when throttle is closed after starting begins.
	Control released upon shift to 4th gear.
	Control released if starting off is not performed within 180 seconds after A-map or B-map is selected.
	Released when the S-HAC switch is pressed again and held down until indicator light turn off.

When any of the above conditions are met, the active map is released and the standard map is selected.

NOTE:
** The "start off" state of the motorcycle is defined as being from the point that the clutch is engaged.*
** Starting off without opening the throttle (throttle opening of 1/8 or less) or after lowering the engine speed by frequent half-clutching may make determination of start off impossible. Do not use S-HAC when running under such conditions.*

SELECTING A MODE

- Start the engine and shift the gear to neutral, 1st, or 2nd. Next, adjust the engine speed so it is no greater than 3 500 rpm.

NOTE:
The S-HAC map setting cannot be change (to A-map or B-map) while a DTC (Diagnostic Trouble Code) is displayed.

A-MAP

- The indicator light ① will light for a lamp check (2 seconds) and then become an engine run time indicator light. Note, however, that even while the indicator light is lit to indicate the engine run time, holding down the S-HAC switch ② for more than 0.7 seconds will cause the indicator light ① to switch to slow flashing (A-map).
- To select A-map, release the S-HAC switch ② while the indicator light ① is flashing slowly (for about 1.8 seconds).
- Selecting A-map will cause the slow flash pattern to continue.

NOTE:
** To switch to the standard map from A-map, hold down the S-HAC switch until the indicator light ① goes out.*
** To switch from A-map to B-map, first switch to the standard map and then switch to B-map.*

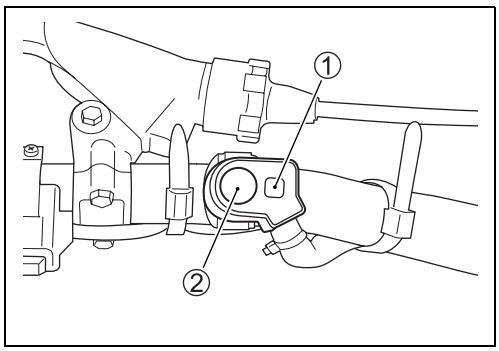

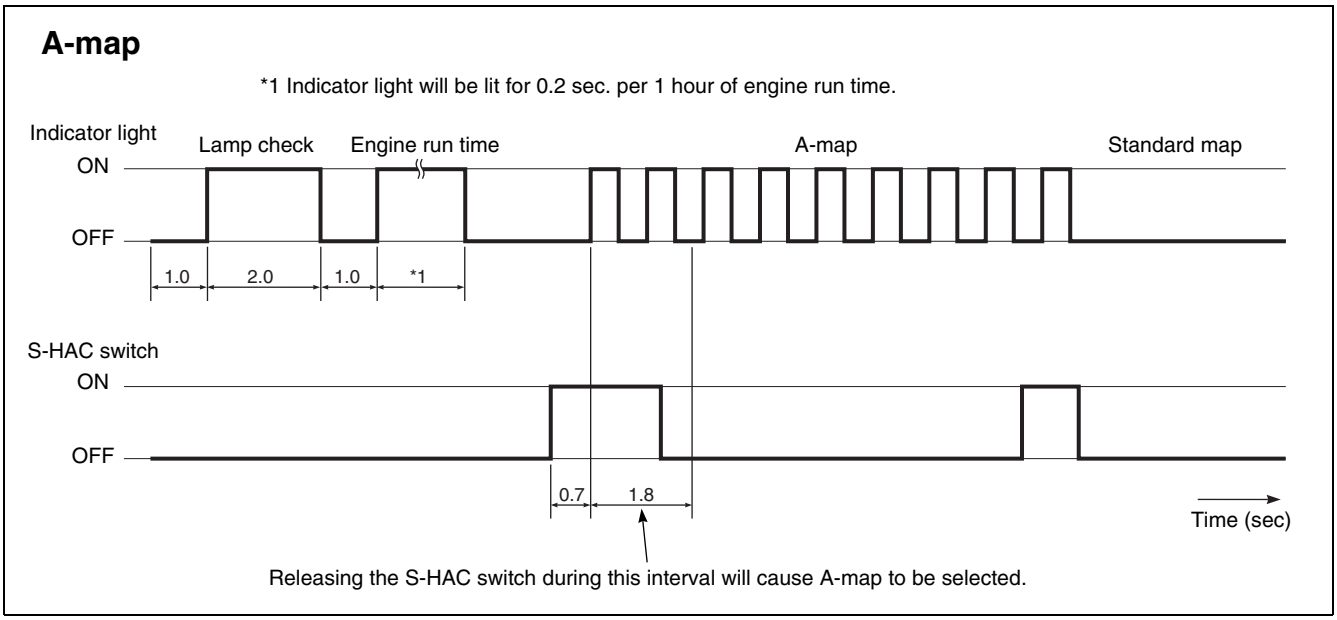

B-MAP

- The indicator light ① will light for a lamp check (2 seconds) and then become an engine run time indicator light. Note, however, that even while the indicator light is lit to indicate the engine run time, holding down the S-HAC switch ② for more than 0.7 seconds will cause the indicator light ① to switch to slow flashing (A-map). Holding down the S-HAC switch ② for more than 1.8 seconds will cause the indicator light ① to switch to fast flashing.
- Releasing the S-HAC switch ② to select B-map will cause the fast flash pattern to continue.

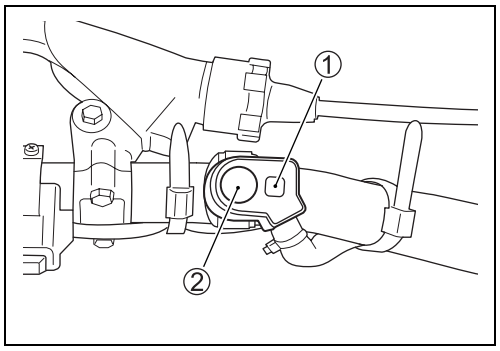

NOTE:

** After holding down the S-HAC switch to switch from A-map (slow flashing) to B-map (fast flashing), holding down the S-HAC switch again will only select standard map.*

** To switch from B-map to A-map, first switch to the standard map and then switch to A-map.*

** To switch to the standard map from B-map, hold down the S-HAC switch until the indicator light ① goes out.*

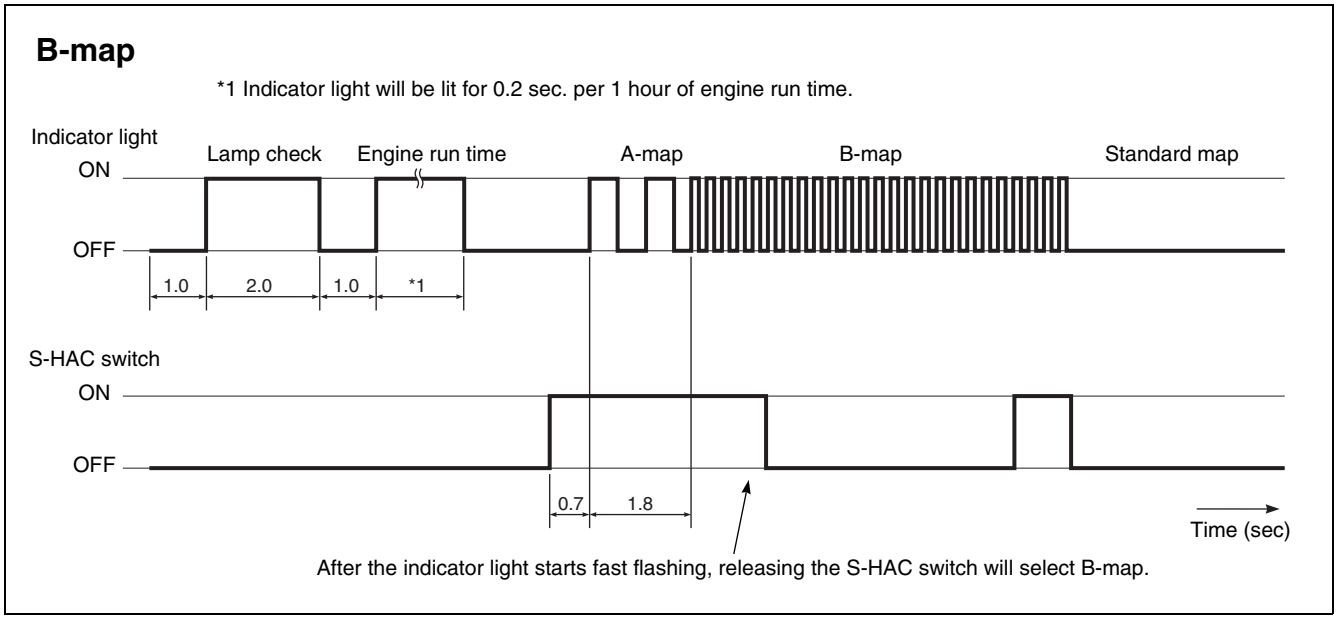

FRONT FORK TUNING

RECOMMENDED AIR PUMP

NOTICE
Applying compressed air with a compressor etc. can damage the fork parts. **Be sure to use a hand-operated air pump.**

Measuring range	220 – 270 kPa (2.2 – 2.7 kgf/cm^2, 31 – 38 psi)
Gauge scale	10 kPa (0.1 kgf/cm^2, 1.4 psi)
Hand-operated air pump	
The air pump is equipped with air adjustment valve.	

With the front forks of the RM-Z250, air spring reaction force, and compression and rebound damping force can be adjusted in accordance with course conditions and rider preferences.
In order to ensure efficient setting work, first check the items below to determine whether there are any suspension abnormalities.

- Front fork air pressure adjustment. (☞3-11)
- Front fork damage and oil leakage. (☞2-44)
- Tire pressure. (☞2-46)
- Tire and wheel damage. (☞2-46)
- Spoke nipple tension and rim lock tightness. (☞2-46)
- Steering movement. (☞2-47)

NOTE:
** Be sure to adjust both right and left front forks equally.*
** Perform settings based on the feeling of running under standard setting.*
** If you lose a sense of the setting orientation for some reason, return to standard setting and re-start adjustment.*

AIR PRESSURE ADJUSTMENT

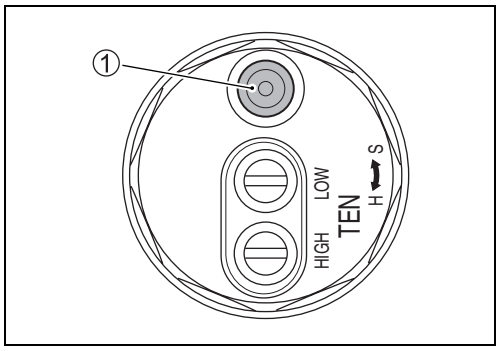

NOTE:
Check the air pressure before riding.

- Remove the air valve cap ①.
- Adjust the air pressure using a hand-operated air pump. (☞3-11)

NOTE:
A rise in air pressure increases reaction force, while a drop in air pressure decreases reaction force.

DATA Air pressure
Standard setting: 240 kPa (2.4 kgf/cm², 34.1 psi)

COMPRESSION DAMPING FORCE ADJUSTMENT

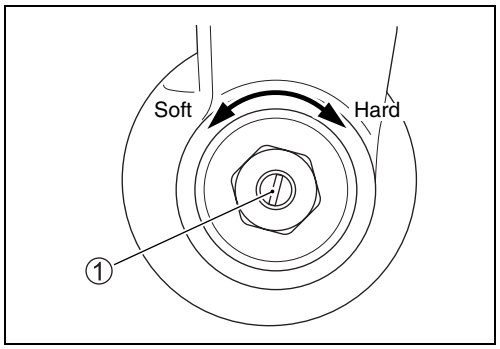

- Turn the adjust screw ① clockwise until it stops (full hard position).

NOTE:
To set the adjuster, you must gently turn the adjust screw ① clockwise until it stops, then back it out the recommended number of turns. Do not force the adjust screw past the stopped position or you may damage the adjuster.

- Turn the adjust screw ① counterclockwise and the 7 click is the standard position.

DATA Compression damping force adjuster
Standard setting: 7 clicks turn counterclockwise

REBOUND DAMPING FORCE ADJUSTMENT

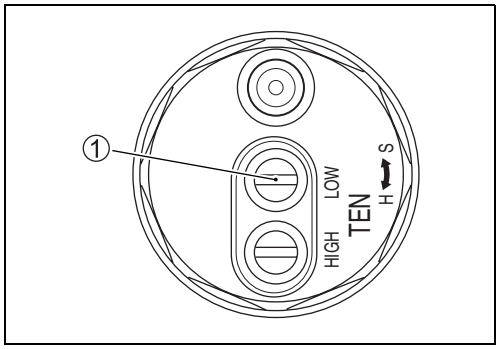

NOTE:
To set the adjuster, you must gently turn the adjust screw ① or ② clockwise until it stops, then back it out the recommended number of turns. Do not force the adjust screw ① or ② past the stopped position, or you may damage the adjuster.

Low speed

- Turn the adjust screw ① clockwise until it stops (full hard position).
- Turn the adjust screw ① counterclockwise and the 15 click is the standard position.

DATA Standard setting (low speed):
15 clicks turn counterclockwise

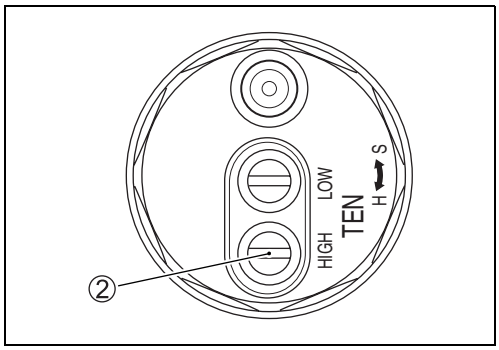

High speed

- Turn the adjust screw ② clockwise until it stops (full hard position).
- Turn the adjust screw ② counterclockwise and the 16 click is the standard position.

DATA Standard setting (high speed):
16 clicks turn counterclockwise

OIL CHANGE

- Remove the front fork. (☞4-73)
- Thoroughly clean the fork before disassembly.

NOTICE
Scratches or other damage on the inner tube or on the oil seal lip will cause oil leakage. **Avoid scratching or damaging the inner tube or the oil seal. Use a mild detergent or car wash soap and sponge out dirt with plenty of water.**

- Release the air pressure gradually. (☞4-74)
- Clamp the outer tube with a vise. Protect the outer tube with a rag when using a vise. (☞4-74)
- Loosen and remove the fork cap from the outer tube with the special tool. (☞4-74)
- Hold the lock-nut and remove the fork cap with the special tool. (☞4-75)

TOOL 09955-04910: Front fork cap wrench (49 mm)

- Place a drain pan under the front fork.
- Drain fork oil by moving the inner tube ① several strokes.

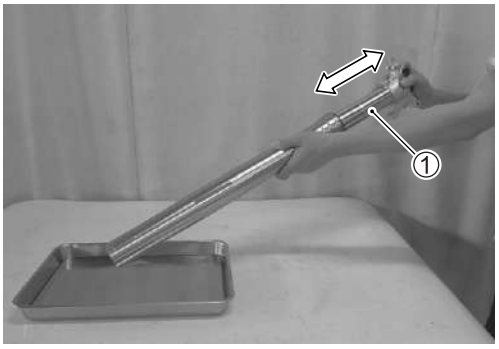

- Drain fork oil by moving the piston rod ② several strokes.
- Pour fork oil, referring to “FRONT FORK REASSEMBLY”. (☞4-81)

FORK KYB SUSPENSION OIL KHL15-11 or equivalent

- Install the front fork. (☞4-89)

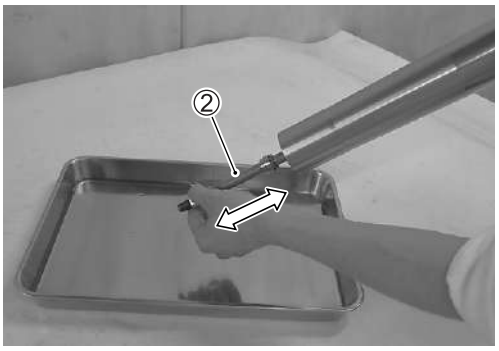

AIR PRESSURE ADJUSTMENT PROCEDURE

NOTE:
Check the air pressure before riding.

- Thoroughly clean the fork before adjustment.

NOTICE
Scratches or other damage on the inner tube or on the oil seal lip will cause oil and air leakages. **Avoid scratching or damaging the inner tube or the oil seal. Use a mild detergent or car wash soap and sponge out dirt with plenty of water.**

- Place the motorcycle on a block to lift front wheel off the ground.
- Adjust the air pressure in the following order.

NOTE:
** Be sure to use a hand-operated air pump. (☞3-7)*
** The specified air pressure is the value when the front fork is fully extended.*

1. Remove the air valve cap ①.

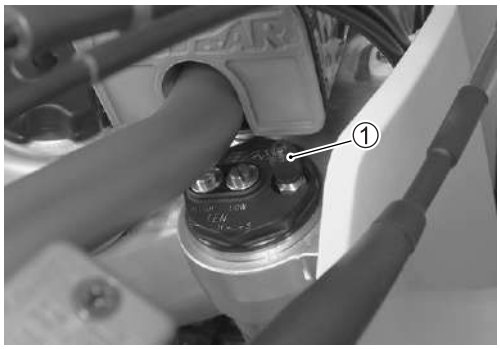

NOTE:
Prevent the foreign matter from getting into the air valve.

2. Adjust the air pressure within the specified range. (☞3-12)

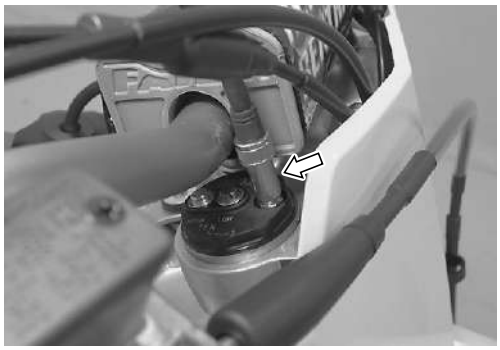

⚠ **WARNING**
Air pressure that is outside the adjustable range specified in the data of recommended air pressure can adversely affect running.

NOTE:
** Adjust the air pressure with the front wheel lifted off the ground.*
** Air pressure change in accordance with atmospheric pressure and/or air temperature.*

DATA Recommended air pressure
(at front fork oil level 115 mm (4.5 in))

	Air pressure
Soft	220 kPa (2.2 kgf/cm², 31.3 psi)
STD	240 kPa (2.4 kgf/cm², 34.1 psi)
Hard	270 kPa (2.7 kgf/cm², 38.4 psi)
Adjustable range	220 – 270 kPa (2.2 – 2.7 kgf/cm², 31.3 – 38.4 psi)

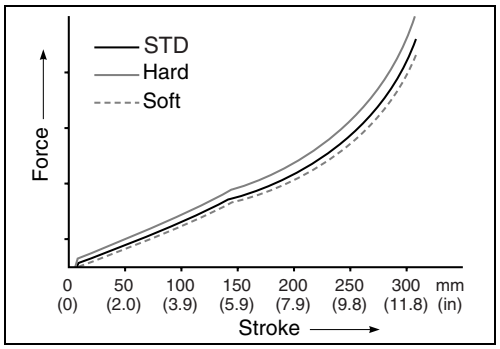

NOTE:
When adjusting the front fork oil level, refer to the FRONT FORK REASSEMBLY. (☞4-86)

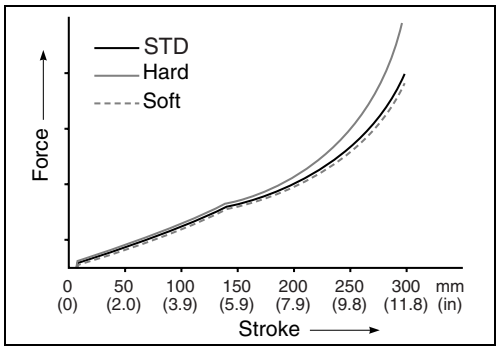

DATA Recommended front fork oil level
(at air pressure 240 kPa (2.4 kgf/cm², 34.1 psi))

	Front fork oil level
Soft	120 mm (4.7 in)
STD	115 mm (4.5 in)
Hard	90 mm (3.5 in)
Adjustable range	90 – 120 mm (3.5 – 4.7 in)

3. Install the air valve cap securely after adjustment.

FRONT FORK TUNING PROCEDURE

Test ride the motorcycle and find out how the front suspension reacts on various types of surface. According to the symptom noticed, adjust the front fork to the best setting for rider and race track conditions. To adjust, attempt changing fork oil level and compression and rebound damping force following the instructions below.

SYMPTOM	SECTION	ADJUSTMENT PROCEDURE
Feels too soft overall and bottoms	• Jump • Large bump • When braking	1. Adjust the compression damping force to a stiffer setting. 2. Increase fork oil level. 3. Increase the air pressure.
Feels too hard near end of travel	• Jump	1. Decrease fork oil level.
Feels too soft near end of travel and bottoms harshly	• Jump • Large bump	1. Adjust the compression damping force to a stiffer setting. 2. Increase fork oil level.
Feels too hard in the beginning of stroke	• Jump • Large bump • Series of medium bumps • Series of small bumps	1. Adjust the compression damping force to a softer setting. 2. Decrease the air pressure.
Feels too soft and unstable	• Series of medium bumps • Series of small bumps	1. Adjust the low-speed and high-speed rebound damping force to stiffer settings. 2. Increase the air pressure.
Bounces	• Jump • Large bump	1. Adjust the high-speed rebound damping force to a stiffer setting.
Bounces	• Series of small bumps	1. Adjust the low-speed rebound damping force to a softer setting.

NOTE:

* *When adjusting the front fork oil level, make sure that the oil level is within the specified range. Also, the level should be increased or decreased by 1 mm (0.04 in).*
* *When adjusting the damping* force*, attempt turning the adjuster 1 to 2 click stops at a time for each adjustment.*
* *When adjusting the air pressure, attempt increasing or decreasing the pressure by 10 kPa (0.1 kgf/cm^2, 1.4 psi) at a time for each adjustment.*

REAR SUSPENSION TUNING

REAR SUSPENSION LABEL

⚠ WARNING

This unit contains high-pressure nitrogen gas.
Mishandling can cause explosion.

*** Keep away from fire and heat.**
*** Read owner's manual for more information.**

NOTE:
Ask your Suzuki dealer to dispose of the rear suspension unit.

With the rear suspension of the RM-Z250, compression and rebound damping force can be adjusted in accordance with course conditions and rider preferences. In order to ensure efficient setting work, first check the items below to determine whether there are any suspension abnormalities.

- Rear shock absorber damage and oil leakage. (☞2-45)
- Swingarm and links tightness. (☞2-45)
- Tire pressure. (☞2-46)
- Tire and wheel damages. (☞2-46)
- Spoke nipple tension and rim lock tightness. (☞2-46)

NOTE:
** Perform settings based on the feeling of running under standard setting.*
** If you lose a sense of the setting orientation for some reason, return to standard setting and re-start adjustment.*

COMPRESSION DAMPING FORCE ADJUSTMENT

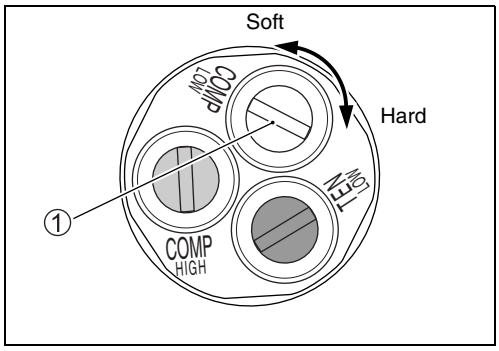

NOTE:
To set the adjuster, you must gently turn the adjust screw ① or ② clockwise until it stops, then back it out the recommended number of turns. Do not force the adjust screw ① or ② past the stopped position, or you may damage the adjuster.

Low speed

- Turn the adjust screw ① clockwise until it stops (full hard position).
- Turn the adjust screw ① counterclockwise and the 10 click is the standard position.

DATA Standard setting (low speed):
10 clicks turn counterclockwise

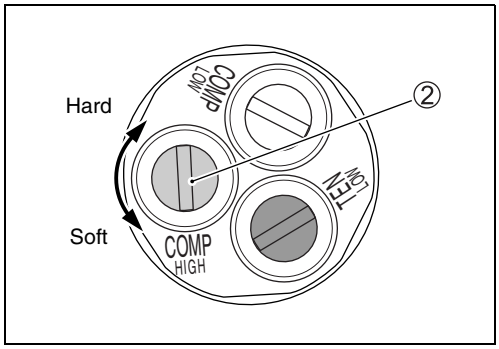

High speed

- Turn the adjust screw ② clockwise until it stops (full hard position).
- Turn the adjust screw ② counterclockwise and the 9 click is the standard position.

DATA Standard setting (high speed):
9 clicks turn counterclockwise

REBOUND DAMPING FORCE ADJUSTMENT

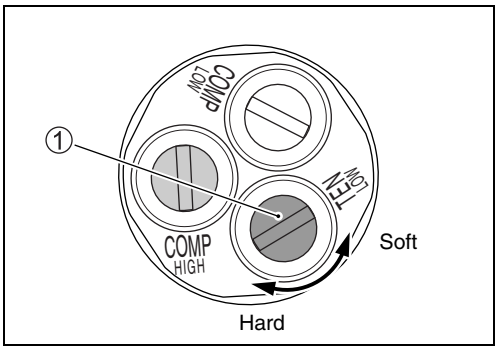

NOTE:
To set the adjuster, you must gently turn the adjust screw ① or ② clockwise until it stops, then back it out the recommended number of turns. Do not force the adjust screw ① or ② past the stopped position, or you may damage the adjuster.

Low speed

- Turn the adjust screw ① clockwise until it stops (full hard position).
- Turn the adjust screw ① counterclockwise and the 11 click is the standard position.

DATA Standard setting (low speed):
11 clicks turn counterclockwise

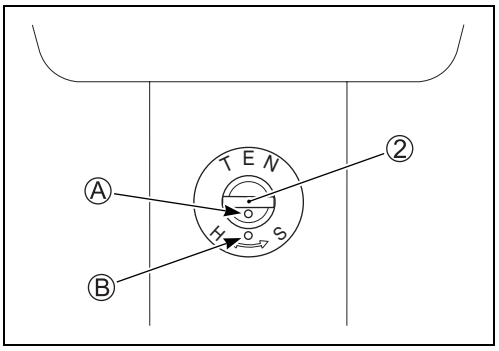

High speed

- Turn the adjust screw ② clockwise until it stops (full hard position).
- Turn the adjust screw ② counterclockwise 17 clicks until the two punch marks (Ⓐ, Ⓑ) align.

DATA Standard setting (high speed):
17 clicks turn counterclockwise

SPRING PRE-LOAD ADJUSTMENT

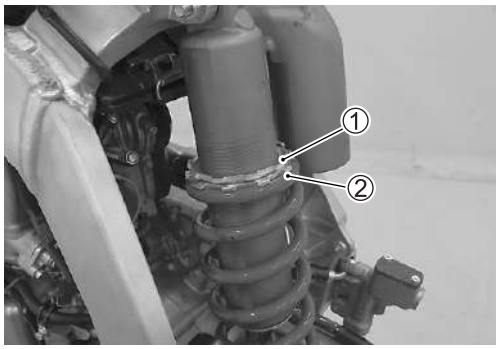

- Place a block under the chassis tube.
- Remove the muffler and seat rail assembly. (☞4-100)
- Loosen the lock-nut ① with the special tool.

TOOL 09910-60611: Adjustable hook wrench

- Turn the adjuster ② clockwise or counterclockwise to change the spring pre-load.
- Tighten the lock-nut ①.

DATA Standard spring set length:
6.0 mm (0.24 in) compressed from spring free length

Spring set length adjustable range:
239 – 252 mm (9.4 – 9.9 in)
[at spring free length 255 mm (10.0 in)]

Spring adjuster lock-nut: 30 N·m (3.0 kgf-m, 21.5 lbf-ft)

NOTICE
Turning the adjuster ② without loosening the lock-nut ① can damage the rear cushion unit. **Turn the adjuster after loosening the lock-nut.**

REAR SUSPENSION TUNING PROCEDURE

- Remove the rear shock absorber. (☞4-100)
- Remove the rear shock absorber spring. (☞4-101)
- Adjust the rear suspension according to the rider's weight and preference by referring to the table below.

Spring	Part No.	Spring rate	Marking paint	Set-length adjustable range
Standard	62211-49HE0	54 N/mm (5.5 kgf/mm)	Pink	239 – 252 mm (9.4 – 9.9 in) [at spring free length 255 mm (10.0 in)]
Soft	62211-49HG0	52 N/mm (5.3 kgf/mm)	Yellow	
Hard	62211-49HH0	56 N/mm (5.7 kgf/mm)	White	240 – 252 mm (9.4 – 9.9 in) [at spring free length 255 mm (10.0 in)]
	62211-49HJ0	58 N/mm (5.9 kgf/mm)	Silver	239 – 252 mm (9.4 – 9.9 in) [at spring free length 255 mm (10.0 in)]

- Measure the distance L1 from the seat bolt to the chain adjuster lock-nut with the motorcycle on the stand and the rear wheel lifted off the ground.

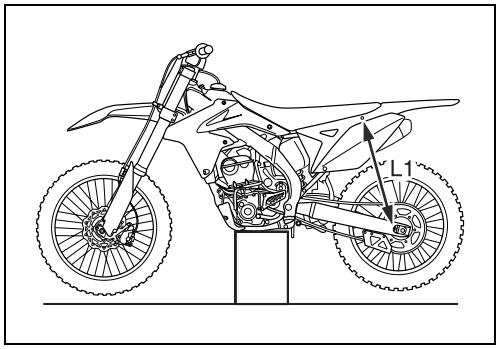

- Measure the distance L2 from the seat bolt to the chain adjuster lock-nut with the motorcycle off the stand and riding the motorcycle normally in full riding gear.
- Find the sag by subtracting L2 from L1. Standard sag range is 105 mm (4.1 in).

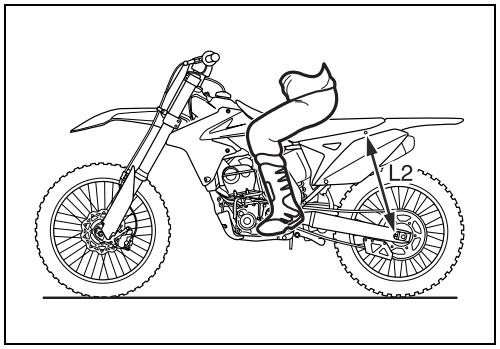

When the sag measured is:	Adjustment procedure
Less than 105 mm (4.1 in)	Reduce spring pre-set length by turning the spring adjuster nut.
More than 105 mm (4.1 in)	Increase spring pre-set length by turning the spring adjuster nut.

After the sag measurement has been set 105 mm (4.1 in), test ride the motorcycle and adjust the suspension for the rider and track conditions referring to the guide below.

SYMPTOM	SECTION	ADJUSTMENT PROCEDURE
Feels too hard overall	• Jump • Series of bumps	1. Adjust the low-speed compression damping force to a softer setting. (See note below.) 2. Adjust the low-speed rebound damping force to a softer setting. (See note below.) 3. Change the spring with an optional softer one. (☞3-18) 4. Adjust the high-speed compression damping force to a softer setting. (See note below.)
Kicks up	• Medium to large bumps	1. Adjust the low-speed compression damping force and low-speed rebound damping force to harder settings. (See note below.) 2. Adjust the high-speed compression damping force to a harder setting. (See note below.)
Bottom feeling or feels too soft and unstable	• Jump • Large bump • Series of bumps	1. Adjust the low-speed and high-speed compression damping force to harder settings. (See note below.) 2. Adjust the low-speed or high-speed rebound damping force to a harder setting. (See note below.) 3. Change the spring with an optional stiffer one. (☞3-18)
Feels harsh and hits bumps too harshly	• Jump • Large bump • Series of bumps	1. Adjust the low-speed compression damping force to a softer setting. (See note below.) 2. Adjust the low-speed rebound damping force to a softer setting. (See note below.) 3. If the suspension feels bottom even with the above adjustment, adjust the high-speed compression damping to a harder setting. (See note below.)
Provides poor traction	• Accelerating • Series of small bumps	1. Adjust the low-speed rebound damping force to a softer setting. (See note below.) 2. If traction feeling does not improve after adjusting above mention, adjust the low-speed compression damping force to a softer setting. (See note below.) 3. If the suspension feels bottom even with the above adjustment, adjust the high-speed compression damping to a harder setting. (See note below.)
Tends to sink front than rear	• Decelerating or braking	1. Adjust the high-speed compression damping force to a softer setting. (See note below.) 2. Adjust the low-speed or high-speed rebound damping force to a harder setting. (See note below.)

NOTE:
When adjusting the damping force setting, attempt turning the adjuster 1 to 2 click stops at a time for each adjustment.

SUSPENSION BALANCE

Balancing the front to rear suspension properly is the most critical adjustment for suspension performance. If the front forks are adjusted harder than the rear suspension, such as changing to heavier front fork oil, stiffer compression and rebound setting, air pressure build up in the forks and so on, the front forks will collapse less on bumps. This transfers more of the motorcycle and rider weight rearward, possibly causing the rear suspension to bottom, where as it felt fine before the front fork adjustment was made.

BALANCE TEST

Stand next to the motorcycle on level ground. Place one foot on the foot rest closest to you. Sharply push down. The front and rear suspensions should both collapse equally.

BALANCING TIPS

- Check for air pressure build-up in front forks. Heat and altitude will increase air pressure in the front forks.
- Always stay within sag measurement limits, 105 mm (4.1 in), when using spring pre-set to stiffen or soften rear suspension. If this is not possible, the next stiffer or softer accessory spring is needed.
- The rear shock compression damping can be used to fine tune suspension balance and is easy to access.

DISASSEMBLY AND ASSEMBLY

CONTENTS

ENGINE REMOVAL AND INSTALLATION

REMOVAL

- Drain engine oil. (☞2-16)
- Drain engine coolant. (☞4-51)
- Remove the seat ①.
- Remove the radiator covers ②, left and right.
- Remove the right frame cover ③.

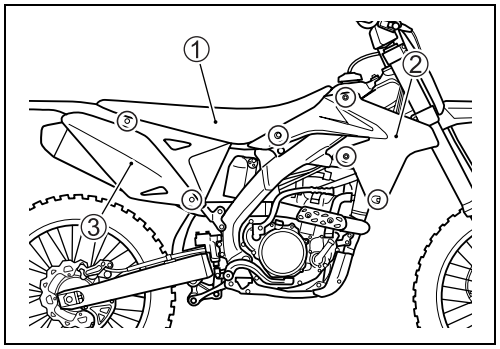

- Place the jack under the frame to support the motorcycle.

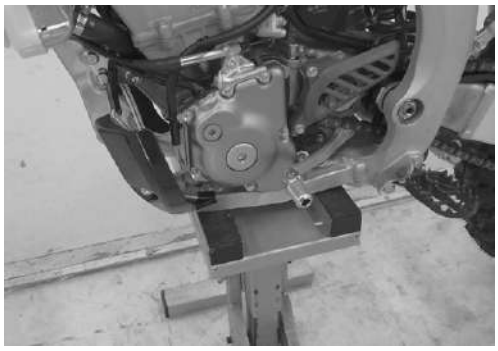

- Disconnect the fuel pump coupler ④.

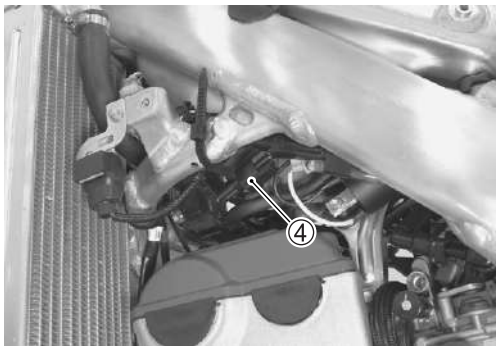

- Remove the fuel tank bolt ⑤ and rubber band ⑥.

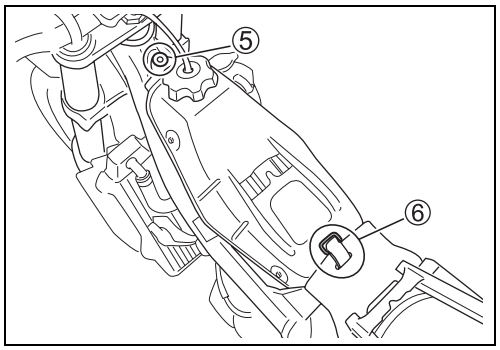

- Lift and hold the fuel tank.
- Clean the retainer Ⓐ and fuel hose connector Ⓑ.
- Place a rag under the fuel hose ⑦ and unlock the fuel hose connector Ⓑ by pulling the retainer Ⓐ.
- Remove the fuel hose connector Ⓑ from fuel pipe.

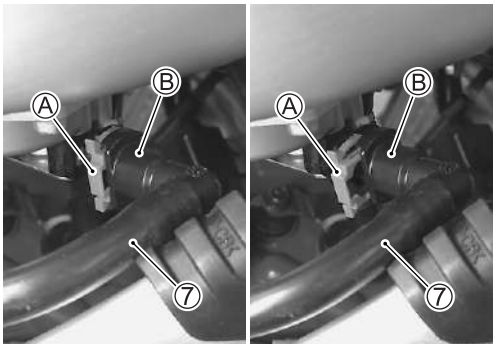

⚠ WARNING

Gasoline is a flammable material that can cause fire hazard or burns.

*** When handling gasoline, make sure to stop the engine and keep away from fire or spark.**
*** The work should be carried out in a well ventilated area.**

NOTE:
When removing the fuel tank, do not leave the fuel hose ⑦ on the fuel tank side.

- Put the cleaned plug and cap to the fuel hose and fuel pump.

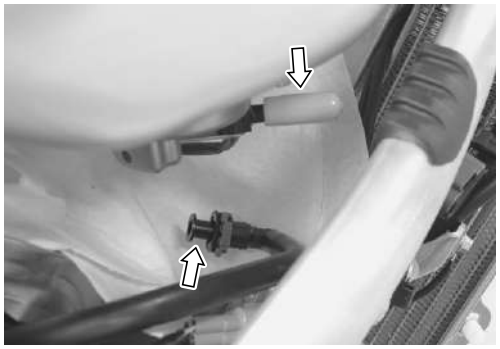

NOTICE

Dirt and dust in the fuel supply line can damage the motorcycle.

*** Put the plug and cap to the fuel hose and fuel pump when the fuel hose connector is disconnected.**
*** Be sure to keep the parts clean when disconnecting and connecting the connector.**

- Remove the fuel tank assembly.

- Loosen the muffler connector clamp bolt ⑧.
- Remove the muffler ⑩ by removing its bolts ⑨.

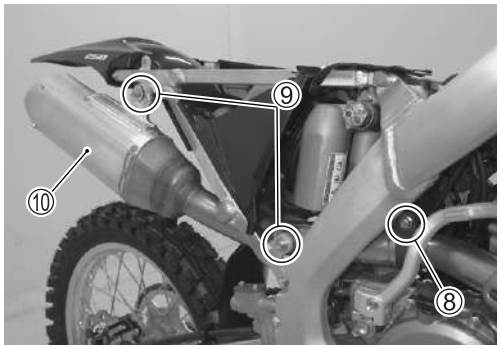

- Remove the exhaust pipe ⑫ by removing its nuts ⑪.
- Remove the exhaust pipe gasket ⑬.

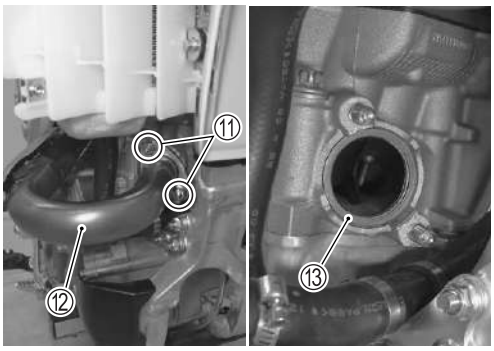

- Remove the front protectors ⑮ by removing their bolts ⑭.

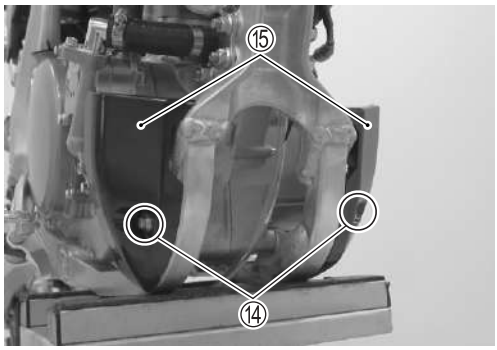

- Remove the radiator louvers ⑯, left and right.
- Remove the radiator mounting bolts ⑰, left and right.

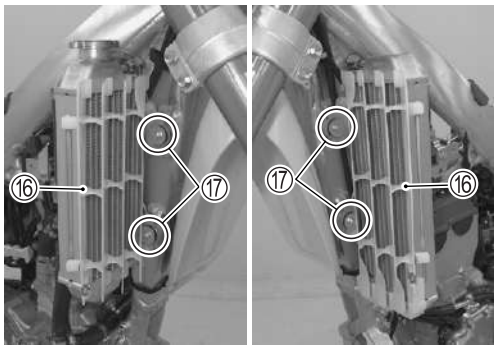

- Loosen the radiator hose clamps ⑱.
- Disconnect the radiator hoses ⑲ and ⑳.
- Remove the radiator hose assembly ㉑.
- Disconnect the ECT sensor coupler ㉒.

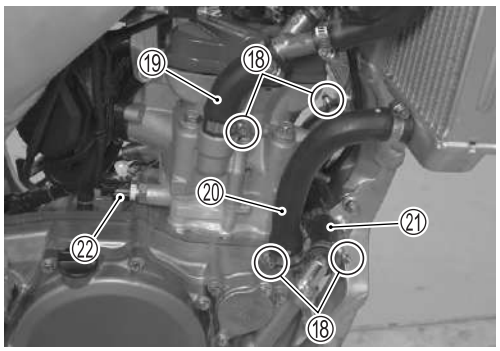

- Disconnect the GP switch coupler ㉓ and magneto lead wire coupler ㉔.
- Remove the TO sensor ㉕ from the bracket.
- Remove the clamp ㉖.

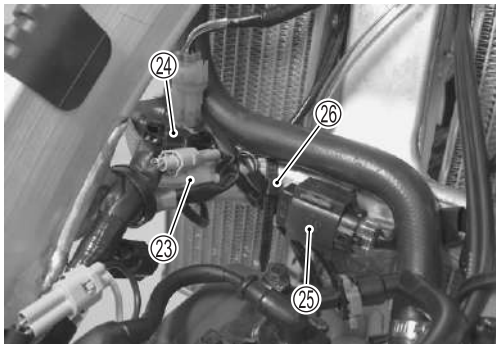

- Remove the clamps ㉗.

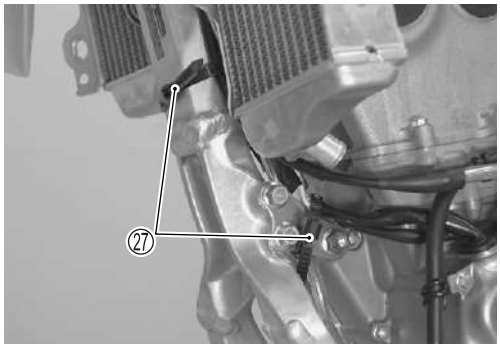

- Remove the clutch cable bracket bolt ㉘ and disconnect the clutch cable ㉙.

NOTE:
Loosen the clutch cable adjuster when disconnecting.

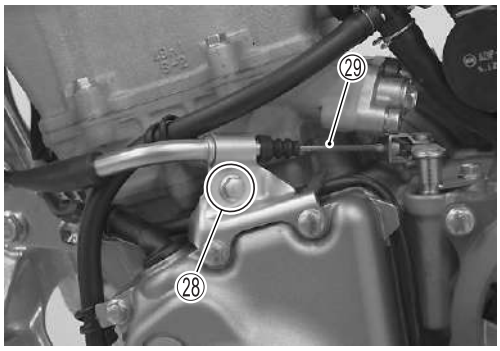

- Remove the throttle body ㉚. (☞4-47)
- Remove the spark plug cap ㉛. (☞2-9)

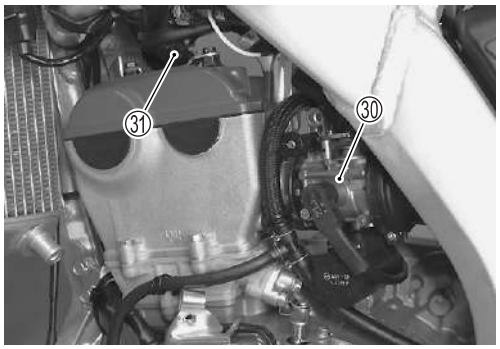

- Remove the gearshift lever ㉝ by removing its bolt ㉜.

NOTE:
Mark the gearshift shaft head Ⓒ at which the gearshift lever slit set for correct reinstallation.

- Remove the engine sprocket cover ㉞ and front chain guide plate ㉟.

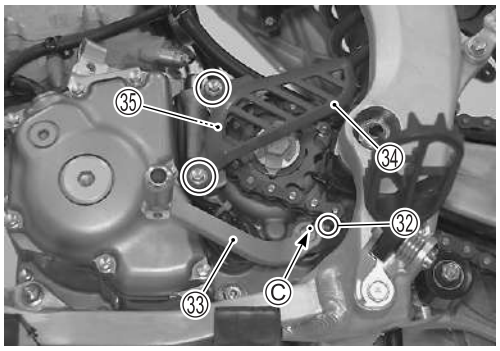

- Flatten the lock washer ㊱.
- Remove the engine sprocket bolt ㊲, lock washer ㊱, washer ㊳ and wave washer ㊴ while depressing the rear brake pedal.

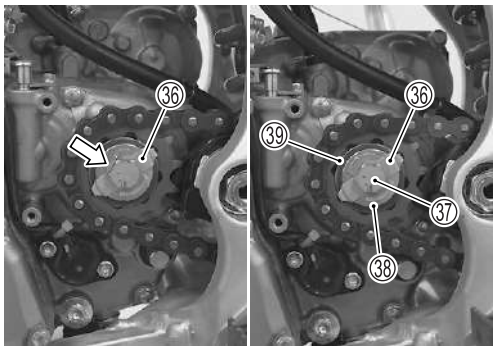

- Remove the drive chain clip ㊵ and release the drive chain ㊶.
- Remove the engine sprocket ㊷.

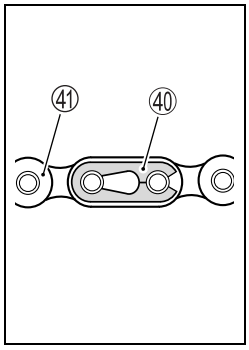

- Remove the cotter pin ㊸, washer ㊹ and clip ㊺.

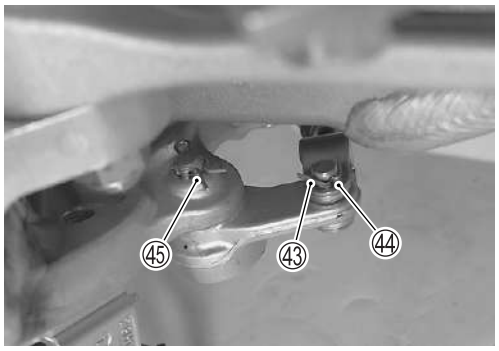

- Remove the master cylinder rod pin ㊻.
- Remove the brake pedal pivot bolt ㊼ and return spring ㊽.
- Remove the kick starter lever ㊿ by removing its bolt ㊾.

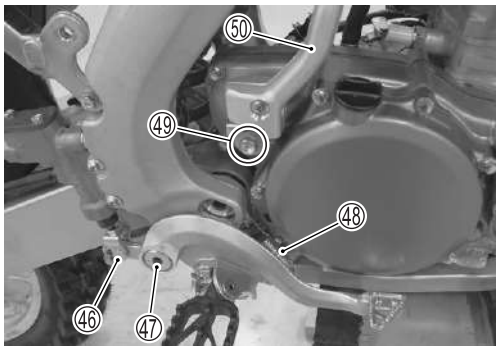

- Remove the regulator/rectifier coupler 51 and ignition coil coupler 52.
- Remove the engine mounting upper brackets 54 by removing the bolts 53 and nut.

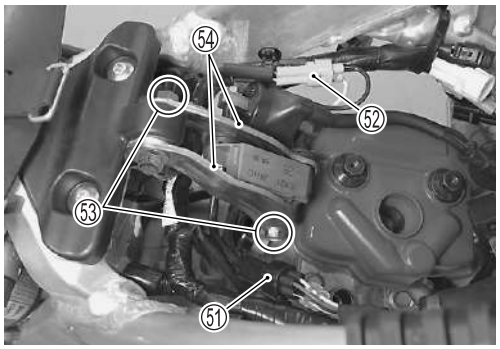

- Remove the engine mounting front brackets 56 by removing their bolts and nuts 55.
- Remove the engine mounting lower bolt and nut 57.

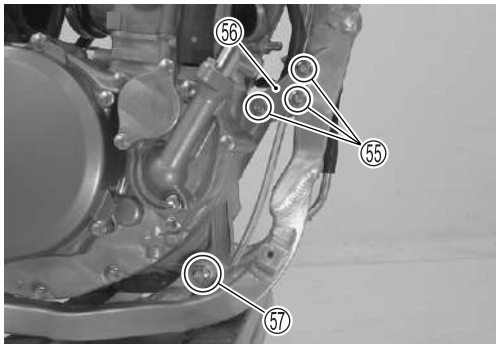

- Remove the swingarm pivot shaft nut 58 and washer 59.
- Extract three quarters of the swingarm pivot shaft 60 so as to keep the swingarm in position.

NOTE:
The swingarm will come off when the swingarm pivot shaft 60 is completely removed.

- Remove the engine from the frame.

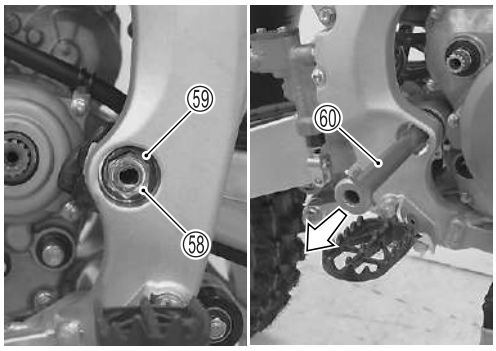

INSTALLATION

Install the engine in the reverse order of removal. Pay attention to the following points:

- Mount the engine on the frame.
- Fit the swingarm in its position and hold it with the swingarm pivot shaft.
- Tighten the engine mounting bolts, nuts and swingarm pivot shaft nut to the specified torque.

NOTE:

** The engine mounting nut is the self-lock type and cannot be used repeatedly. If the self-lock effect is lose, replace it with a new one.*

** The engine mounting bolts and nuts can loosen quickly when the engine is removed and installed. Be sure to retighten the bolts and nuts.*

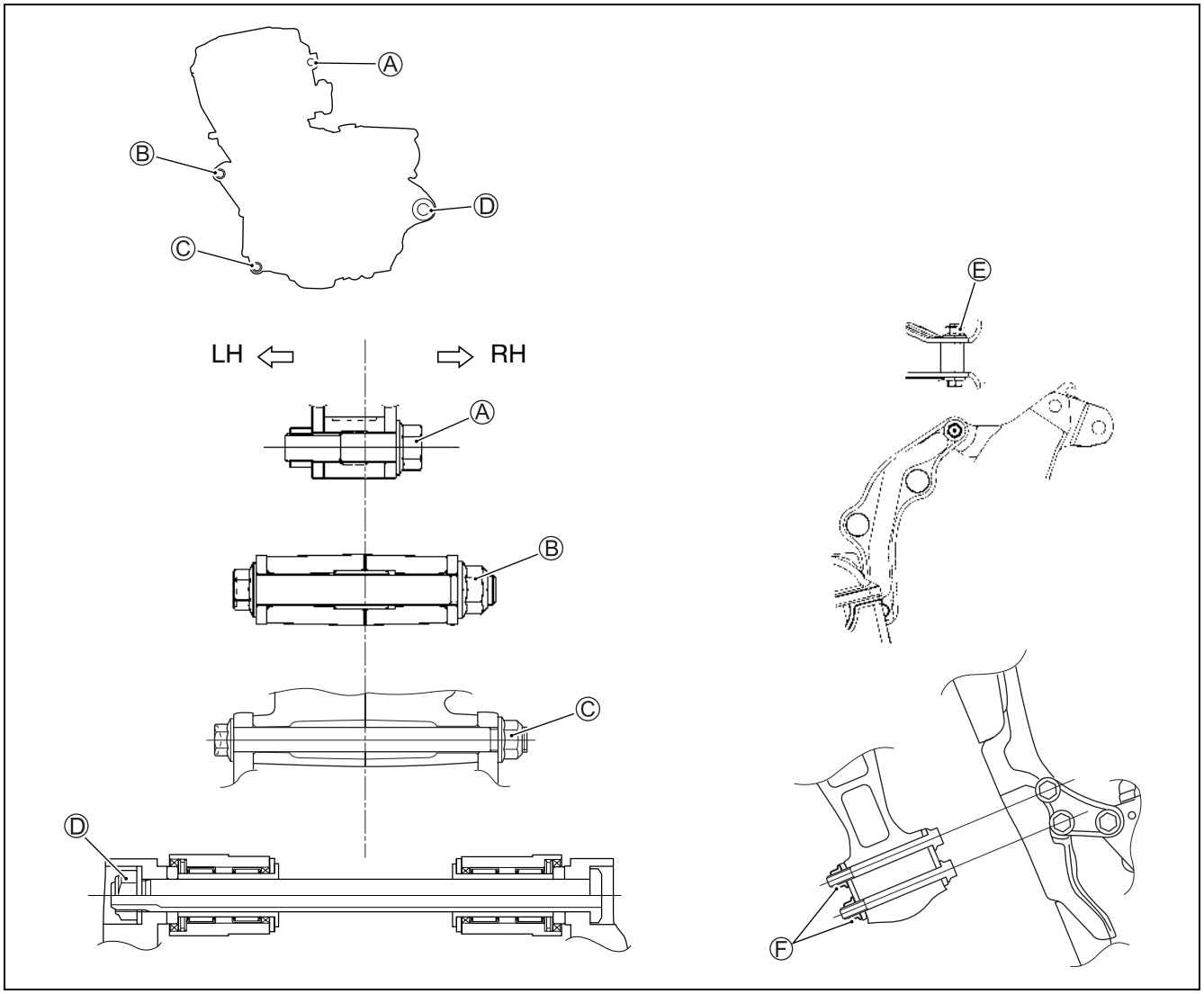

ITEM	N·m	kgf-m	lbf-ft
Ⓐ	45	4.5	32.5
ⒷⒸ	66	6.6	47.5
Ⓓ	70	7.0	50.5
ⒺⒻ	40	4.0	29.0

- Install the kick starter lever ① in the correct position. (☞4-46)
- Apply thread lock to the kick starter lever bolt ② and tighten it to the specified torque.

99000-32030: THREAD LOCK CEMENT "1303B" or equivalent

Kick starter lever bolt: 29 N·m (2.9 kgf-m, 21.0 lbf-ft)

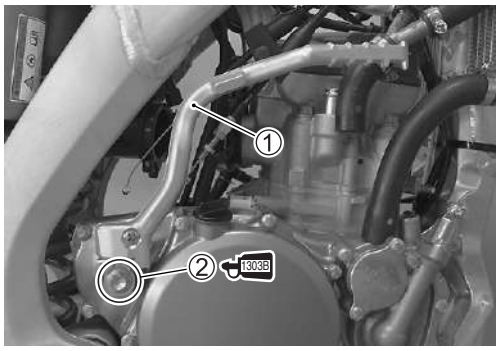

- Apply grease to the brake pedal pivot bolt ③.

99000-25011: SUZUKI SUPER GREASE "A" or equivalent

- Install the brake pedal and return spring. (☞5-20)
- Tighten the brake pedal pivot bolt ③ to the specified torque.

Brake pedal pivot bolt: 29 N·m (2.9 kgf-m, 21.0 lbf-ft)

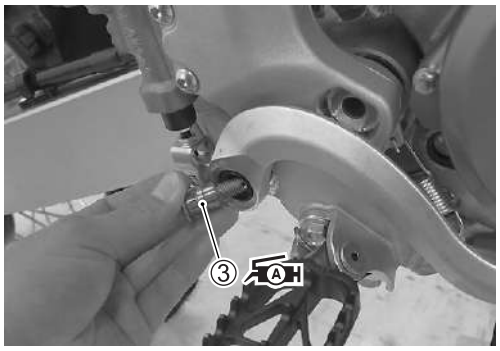

- Install the clip ④, washer ⑤ and cotter pin ⑥.

NOTE:
Replace the cotter pin ⑥ with a new one.

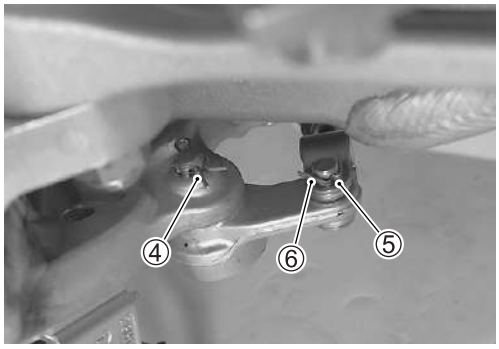

- Clean the engine sprocket spacer and driveshaft if any dust, stone or foreign materials stuck on them.
- Install the engine sprocket ⑦ properly.

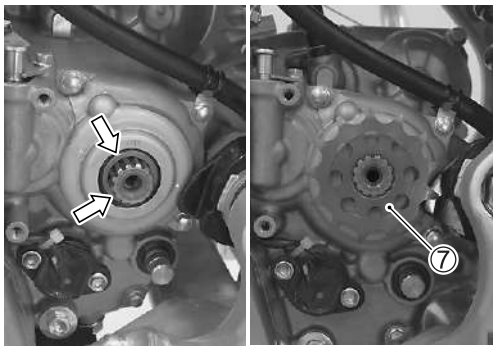

- Reassemble the drive chain clip so the slit end faces opposite the direction of rotation.

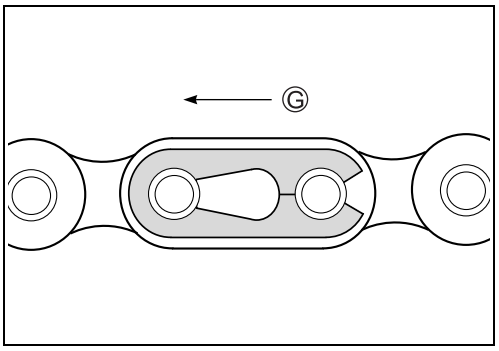

Ⓖ Direction of travel

- Clean the engine sprocket bolt ⑧.
- Apply engine oil to the bearing surface and the threaded portion of the engine sprocket bolt ⑧.
- Install the wave washer ⑨, washer ⑩, new lock washer ⑪ and engine sprocket bolt ⑧.

NOTE:
** Replace the lock washer ⑪ with a new one.*
** Face each stamped mark Ⓗ outside.*

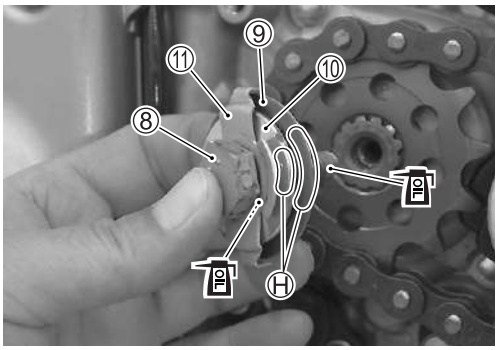

- Tighten the engine sprocket bolt ⑧ to the specified torque while depressing the rear brake pedal.

Engine sprocket bolt: 32 N·m (3.2 kgf-m, 23.0 lbf-ft)

- Bend the lock washer ⑪ to secure the bolt.

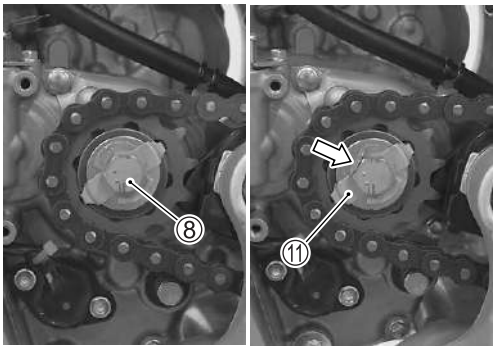

- Install the front chain guide plate ⑫ and engine sprocket cover ⑬.

NOTE:
When installing the front chain guide plate ⑫, pay attention to its direction.

- Tighten the engine sprocket cover bolts ⑭ to the specified torque.

Engine sprocket cover bolt: 11 N·m (1.1 kgf-m, 8.0 lbf-ft)

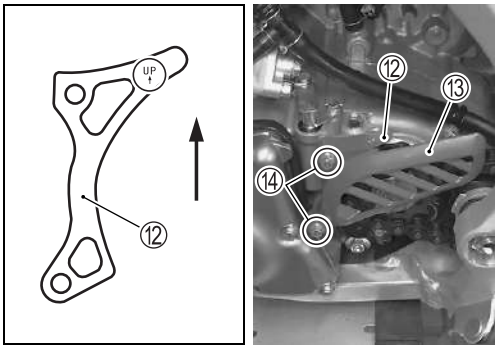

- Align the matching mark on the gearshift shaft head with slit of the gearshift lever ⑮.
- Tighten the gearshift lever bolt ⑯.

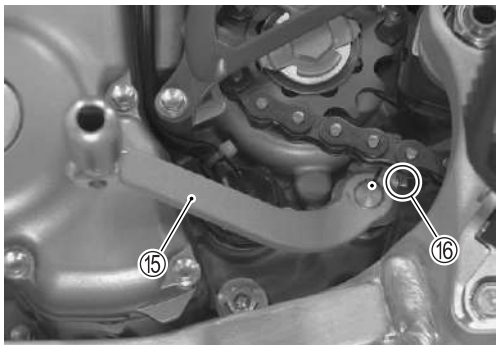

- Fit the projection Ⓘ of the throttle body to the depression of intake pipe.
- Position the clamps correctly and tighten the screws ⑰. (☞5-14)
- Install the condenser ⑱.

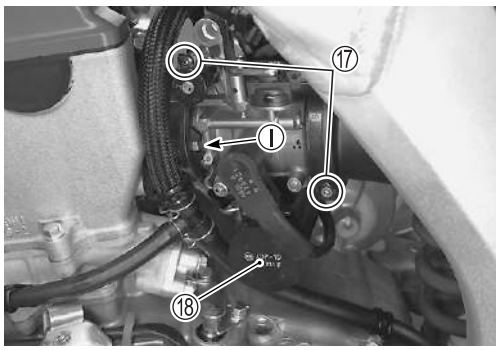

- Align the matching mark Ⓙ of the clutch cable ⑲ between two line marks Ⓚ of the clutch cable bracket.
- Tighten the clutch cable bracket bolt ⑳ to the specified torque.

Clutch cable bracket bolt: 10 N·m (1.0 kgf-m, 7.0 lbf-ft)

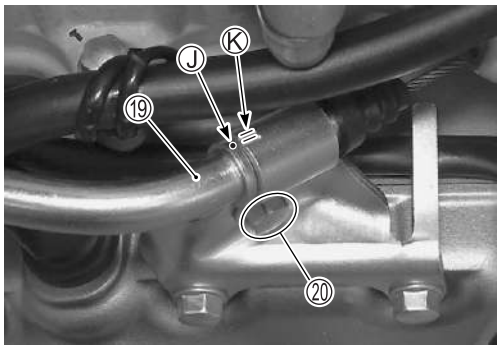

- Install the TO sensor ㉑.

NOTE:
When installing the TO sensor ㉑, the arrow mark Ⓛ must be pointed upward.

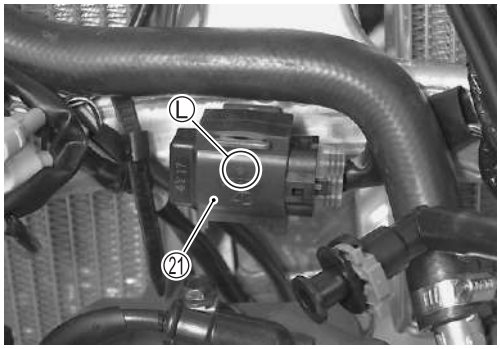

- Install the new muffler joint connector ㉒ and new exhaust pipe gasket ㉓.

NOTE:

** Replace the connector ㉒ and gasket ㉓ with new ones to prevent exhaust gas leakage.*

** When installing a new connector, clean the exhaust pipe and joint of the muffler.*

- Temporarily tighten the exhaust pipe nuts ㉔.

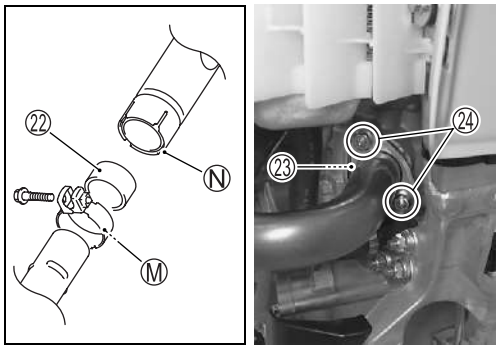

- Insert the muffler to the exhaust pipe.
- Apply engine oil to the bearing surface and the threaded portion of the muffler mounting front bolt ㉕.
- Temporarily tighten the muffler mounting front bolt ㉕ and rear bolt ㉖.
- Temporarily tighten the muffler connector clamp bolt ㉗.

NOTE:

Fit the convex part Ⓜ of connector clamp to the concave part Ⓝ of muffler.

- Check the clearance between exhaust pipe and breather hose, wiring harness. (☞5-14)
- Be sure to tighten the bolts and nuts in the following order.

1) Muffler mounting front bolt ㉕ and rear bolt ㉖
2) Exhaust pipe nuts ㉔
3) Connector clamp bolt ㉗

Exhaust pipe nut: 23 N·m (2.3 kgf-m, 16.5 lbf-ft)
Muffler mounting front bolt:
21 N·m (2.1 kgf-m, 15.0 lbf-ft)
Muffler mounting rear bolt:
23 N·m (2.3 kgf-m, 16.5 lbf-ft)
Muffler connector clamp bolt:
17 N·m (1.7 kgf-m, 12.5 lbf-ft)

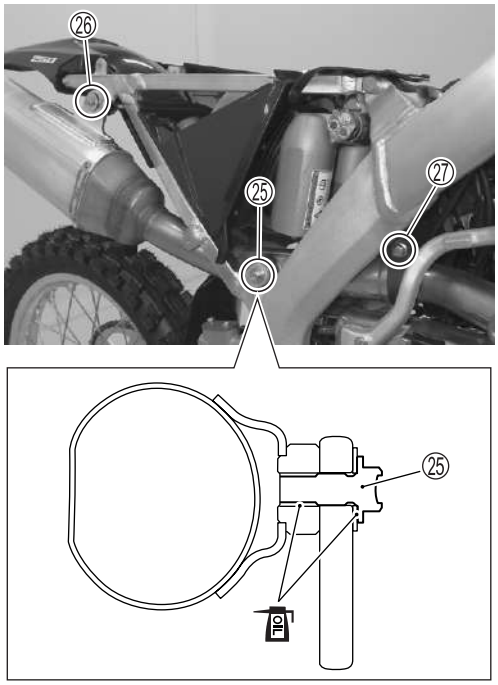

- Insert the fuel hose connector Ⓞ to fuel pipe securely.
- Lock the fuel hose connector Ⓞ by pushing the retainer Ⓟ.
- Confirm that fuel hose connector Ⓞ is not disconnected by hand.

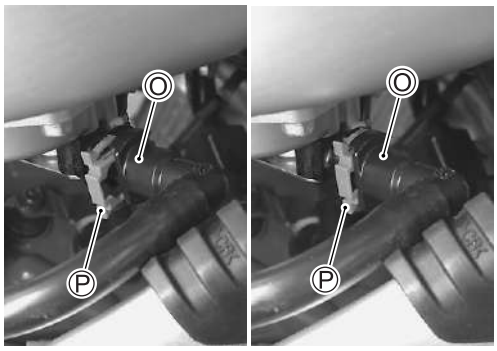

INSPECTION AFTER INSTALLATION

- Engine oil level (☞2-15)
- Engine coolant level and coolant leakage (☞2-23, -24)
- Fuel leakage
- Exhaust gas leakage
- Throttle cable play (☞2-26)
- Clutch cable play (☞2-25)
- Drive chain slack (☞2-37)
- Brake pedal height (☞2-43)
- Wiring harness, cable and hose routing (☞5-10 to -16)

CYLINDER HEAD, CYLINDER AND PISTON

ENGINE TOP SIDE DISASSEMBLY

CYLINDER HEAD COVER REMOVAL

- Remove the seat. (☞4-2)
- Remove the radiator covers and fuel tank. (☞4-2)
- Remove the spark plug cap retainer, spark plug cap and spark plug. (☞2-9)
- Remove the TO sensor ① from the bracket.
- Remove the cylinder head cover ③ and gasket ④ by removing the bolts ②.

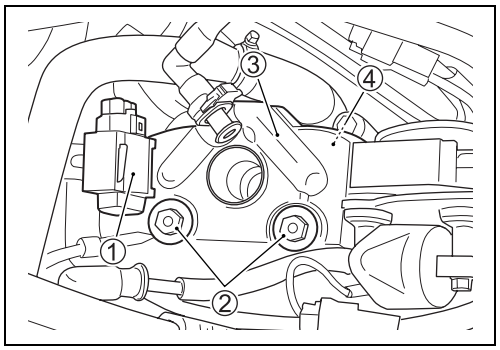

- Remove the cylinder head cover No.2 gasket ⑤.

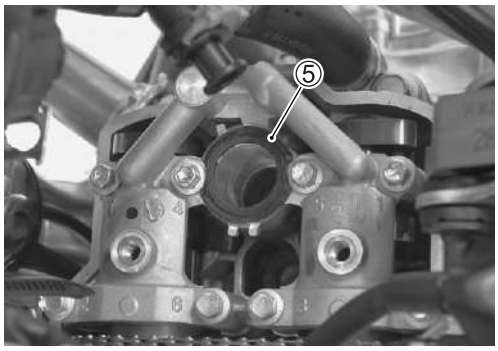

CAMSHAFTS (AUTOMATIC DECOMP.) AND CAM CHAIN TENSION ADJUSTER REMOVAL

- Remove the cylinder head cover. (☞above)
- Drain engine oil. (☞2-16)
- Remove the TDC plug ① and crankshaft hole plug ②.

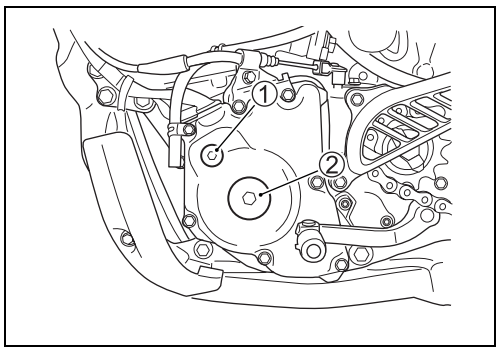

- Place a wrench over the crankshaft and turn it counterclockwise to align the TDC mark Ⓐ with the grooves Ⓑ of the timing inspection hole.

NOTE:
** The piston must be at TDC on the compression stroke.*
** Make sure that the cylinder is at TDC on compression stroke and also the timing mark Ⓒ on the camshafts are aligned with the mating surface of the cylinder head.*

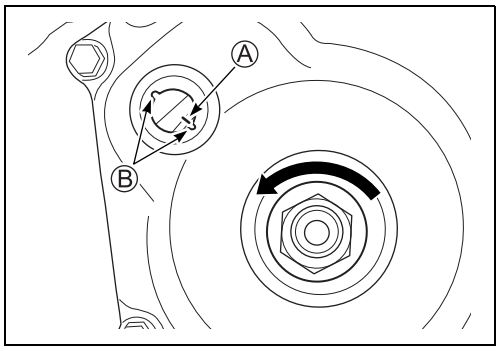

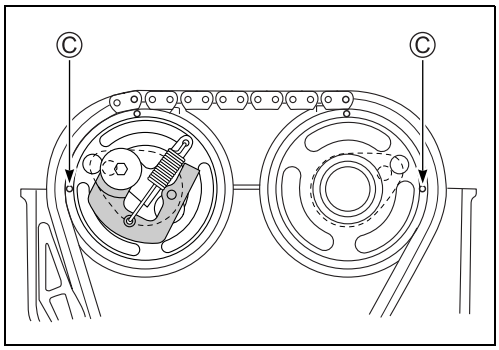

Ⓒ Timing mark

- Disconnect the condenser coupler ③ and release the clamp ④.
- Remove the condenser ⑤.

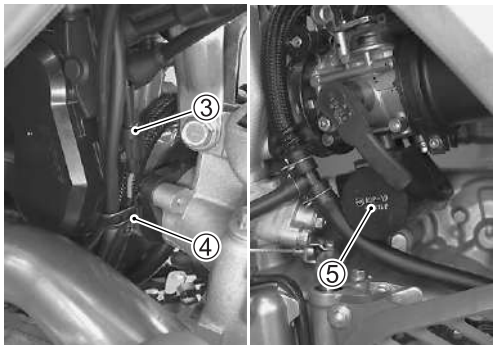

- Remove the cam chain tension adjuster cap bolt ⑥ and gasket ⑦.
- Insert a 3 mm hexagon wrench Ⓓ into the groove of cam chain tension adjuster ⑨.
- Remove the cam chain tension adjuster ⑨ by removing its bolts ⑧ while inserting the hexagon wrench Ⓓ.

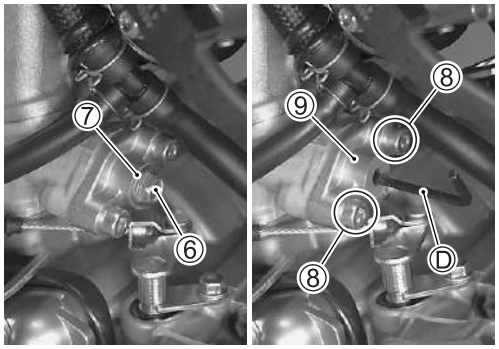

- Remove the camshaft journal holder ⑩.

NOTE:
** Be sure to loosen the camshaft journal holder bolts evenly by shifting the wrench in the descending order of numbers.*
** The descending order of numbers are indicated on the camshaft journal holder.*

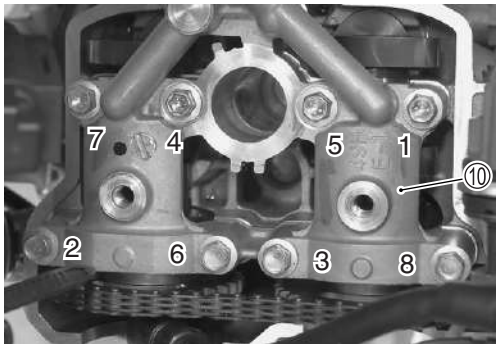

- Disengage the camshafts ⑫ from cam chain ⑪.
- Remove the dowel pins ⑬ and C-rings ⑭.

NOTE:
Do not drop the cam chain ⑪, dowel pins ⑬ and C-rings ⑭ into the crankcase.

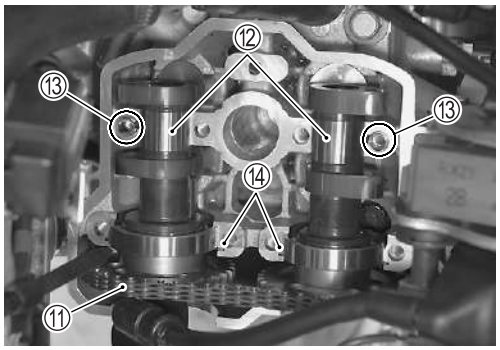

CYLINDER HEAD REMOVAL

- Remove the camshafts. (☞4-14)
- Remove the throttle body. (☞4-47)
- Drain engine coolant. (☞4-51)
- Loosen the muffler connector clamp bolt ①.
- Remove the exhaust pipe nuts ②.
- Remove the exhaust pipe ③ and exhaust pipe gasket ④.

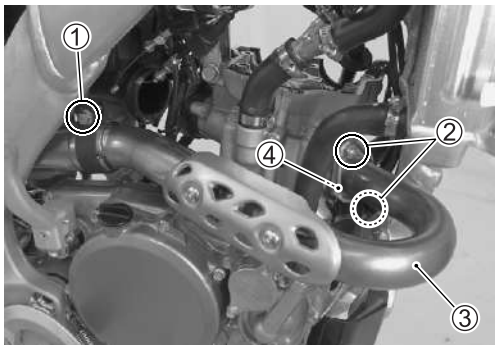

- Disconnect the radiator hose ⑥ by loosing its clamp screw ⑤.

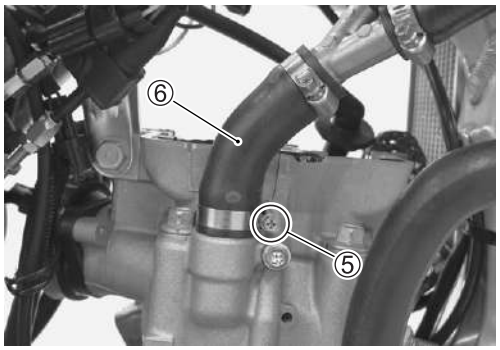

- Remove the regulator/rectifier coupler ⑦ and ignition coil coupler ⑧.
- Remove the engine mounting upper brackets ⑩ by removing the bolts ⑨ and nut.

NOTE:
Cover the cylinder head with a waste cloth or such similar material so as to prevent foreign substance like sand or dirt from penetrating the cylinder head.

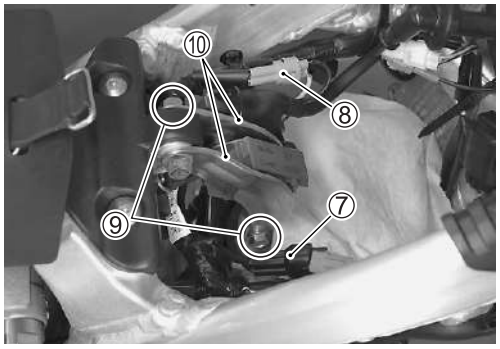

- Release the clamps ⑪.
- Remove the cylinder head base bolts ⑫.
- Loosen the cylinder base bolt ⑬.

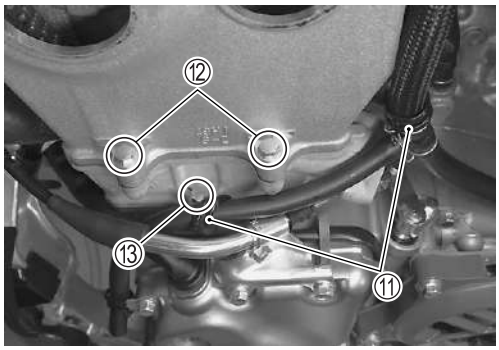

- Remove the cylinder head bolts ⑭.

NOTE:
When loosening the cylinder head bolts ⑭, loosen each bolt little by little diagonally.

- Remove the cylinder head ⑮.

NOTE:
If the cylinder head does not come off easily, lightly tap it using a plastic hammer.

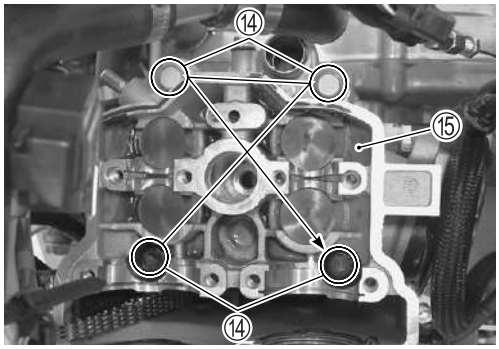

- Remove the cylinder head gasket ⑯, dowel pins ⑰ and cam chain No.1 guide ⑱.

NOTE:
Do not drop the dowel pins ⑰ and cam chain ⑲ into the crankcase.

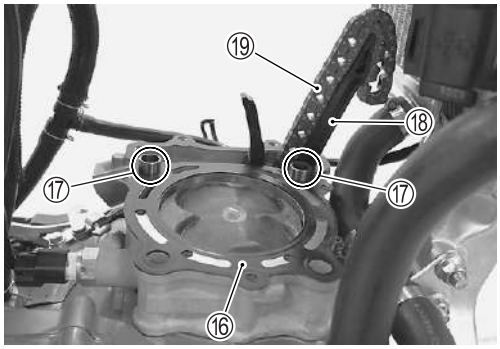

CYLINDER REMOVAL

- Remove the cylinder head. (☞4-16)
- Disconnect the ECT sensor coupler ①.
- Remove the cylinder ③ by removing the cylinder base bolt ②.

NOTE:
Do not drop the cam chain ④ into the crankcase.

NOTE:
If the cylinder does not come off easily, lightly tap it using a plastic hammer.

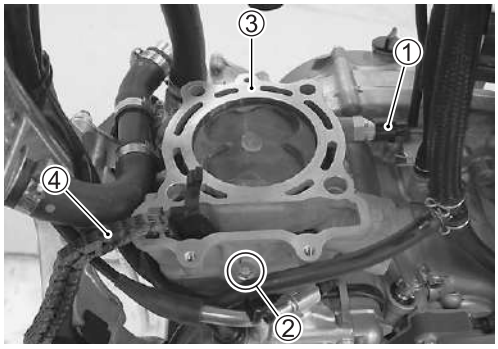

- Remove the cylinder gasket ⑤ and dowel pins ⑥.

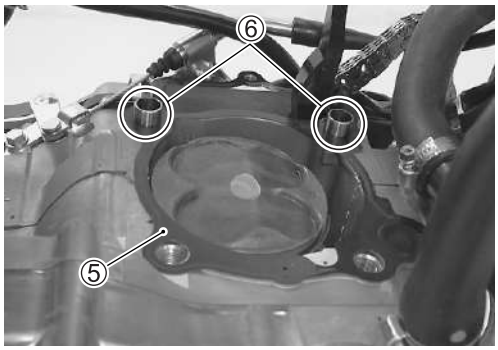

PISTON AND PISTON RING REMOVAL

- Remove the cylinder. (☞4-18)
- Place a clean rag over the cylinder base to prevent the piston pin circlip ① from dropping into the crankcase.
- Remove the piston pin circlip ①.

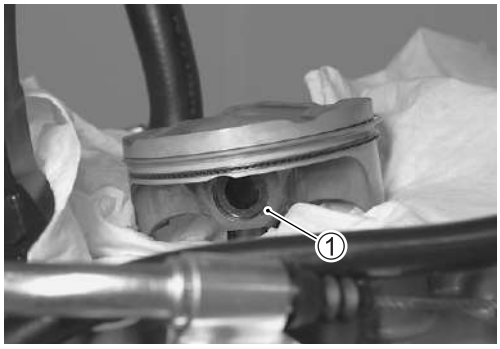

- Remove the piston pin ② and piston ③.

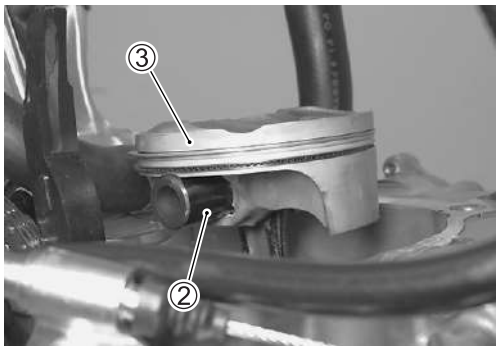

- Carefully spread the ring opening with your thumbs and then push up the opposite side of the ring ④ to remove it.
- Remove the oil ring in the same procedure.

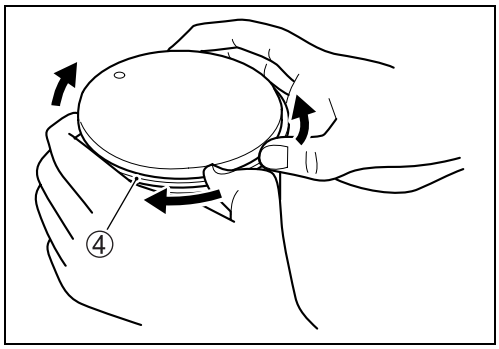

ENGINE TOP SIDE ASSEMBLY

PISTON AND PISTON RING INSTALLATION

Install the piston and piston ring in the reverse order of removal. Pay attention to the following points:

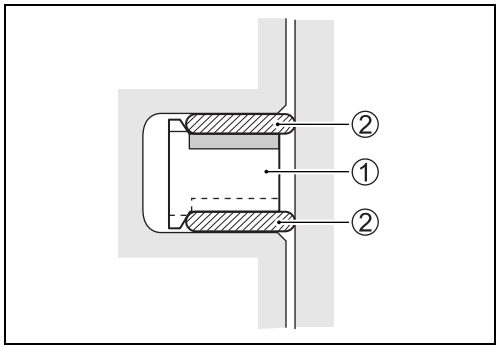

Piston Ring

- Install the piston rings in the order of oil ring and 1st ring.
- The first member to go into the oil ring groove is a spacer ①. After placing the spacer, fit the two side rails ②.

NOTE:
Side designations, top and bottom, are not applied to the spacer and side rails: you can position each either way.

NOTE:
When installing the spacer ①, be careful not to allow its two ends to overlap in the groove.

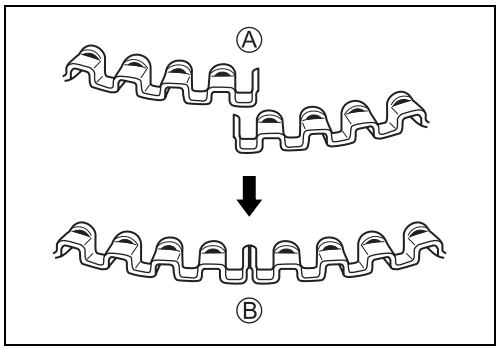

Ⓐ INCORRECT
Ⓑ CORRECT

- Be sure to bring the concave side of 1st ring to the top when fitting it to the piston.

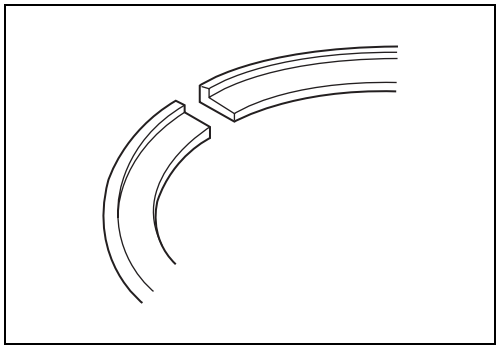

- Position the gaps of the two ring as shown. Before inserting a piston into the cylinder, check that the gaps are so located.

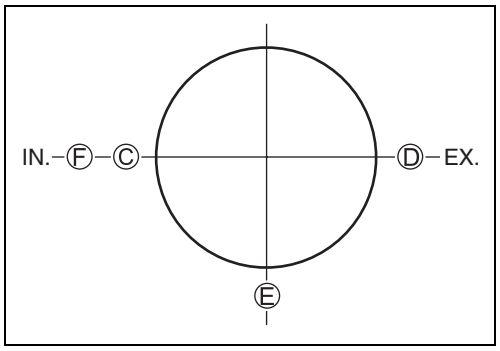

Ⓒ 1st ring
Ⓓ Upper side rail
Ⓔ Spacer
Ⓕ Lower side rail

Piston

- Install the piston ① with the punch mark Ⓐ facing towards the exhaust side.

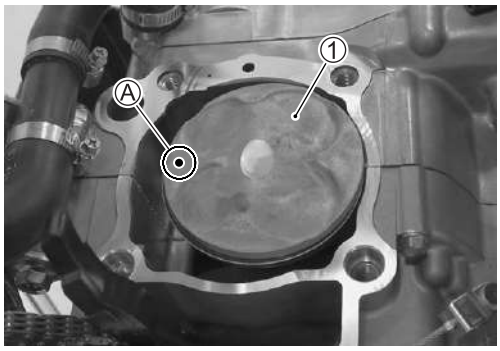

- Before installing the piston pin ②, apply molybdenum oil solution onto its surface.

MOLYBDENUM OIL SOLUTION

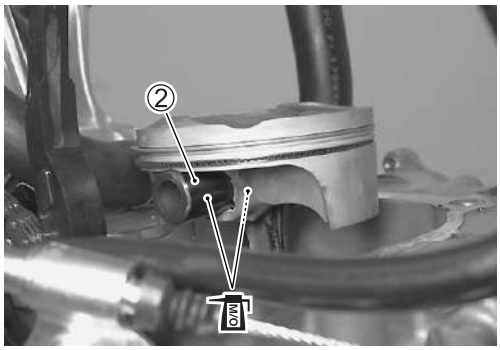

- Place a clean rag over the cylinder base to prevent the piston pin circlip ③ from dropping into crankcase. Install the piston pin circlip ③.

NOTE:

** Replace the piston pin circlip ③ with a new one.*

** End gap of the piston pin circlip ③ should not be aligned with the cutaway Ⓑ in the piston pin bore.*

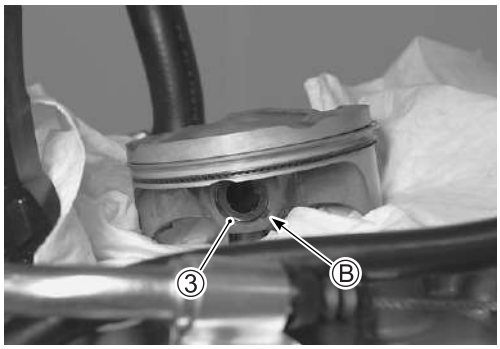

CYLINDER AND CYLINDER HEAD INSTALLATION

Install the cylinder and cylinder head in the reverse order of removal. Pay attention to the following points:

Cylinder

- Thoroughly wipe off oil from the fitting surface of the crankcase.
- Apply bond to the crankcase as shown.

1215 99000-31110: SUZUKI BOND "1215" or equivalent

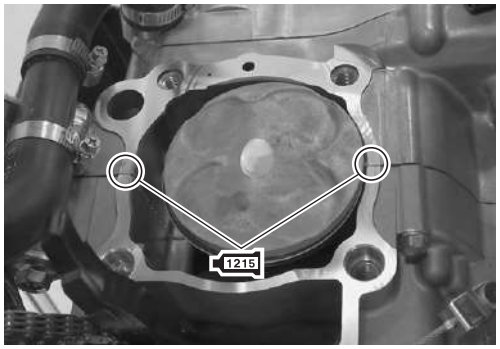

- Install the dowel pins ① into the crankcase and then install the new cylinder gasket ②.

NOTE:
Replace the cylinder gasket ② with a new one.

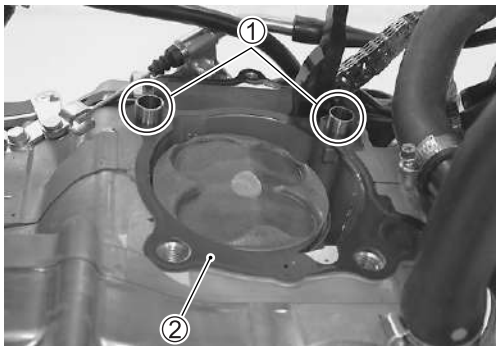

- Apply molybdenum oil solution to the sliding surface of the piston and cylinder bore.

M/O MOLYBDENUM OIL SOLUTION

- Hold each piston ring with the piston ring sections positioned correctly and put it into the cylinder.
- Make sure that the piston rings are caught by the cylinder skirt.
- Place the cylinder ③ on the crankcase.

NOTE:
Do not drop the cam chain ④ into the crankcase.

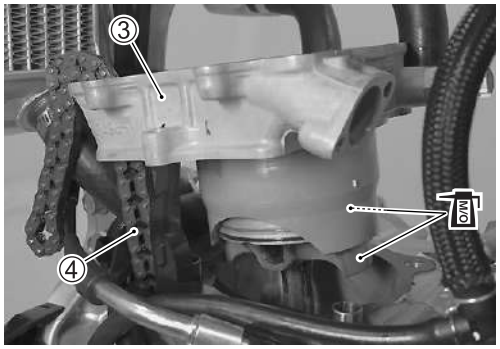

- Fit the clamp ⑤ to the cylinder base bolt ⑥.
- Temporarily tighten the cylinder base bolt ⑥.
- Insert the cam chain No.1 guide end Ⓐ into the recess Ⓑ of the crankcase securely.
- Fit the projection Ⓒ of the cam chain No.1 guide ⑦ in the groove Ⓓ of the cylinder.

NOTE:
Make sure that cam chain engages properly to the cam chain drive sprocket.

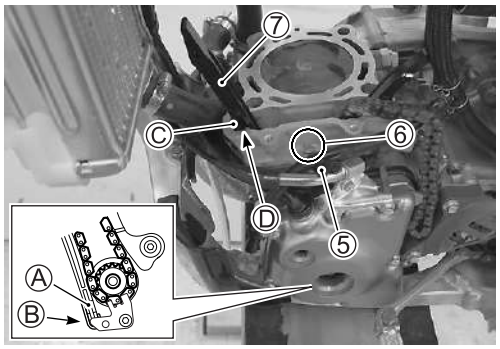

Cylinder Head

- Install the dowel pins ① into the cylinder and then install the new cylinder head gasket ② onto the cylinder.

NOTE:
Replace the cylinder head gasket ② with a new one.

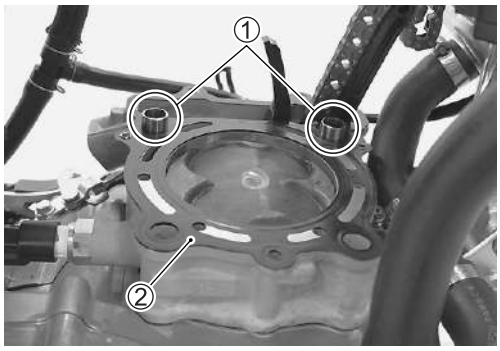

- Place the cylinder head ③ on the cylinder.

NOTE:
Do not drop the cam chain ④ into the crankcase.

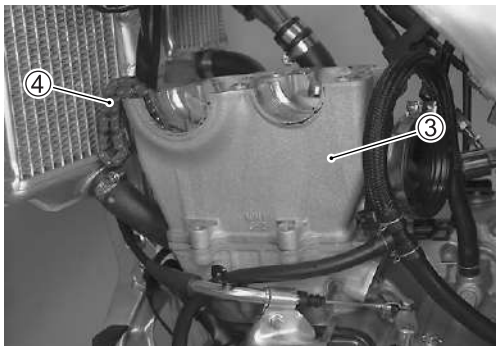

- Apply engine oil to the washers and thread portion of the bolts before installing the cylinder head bolts.

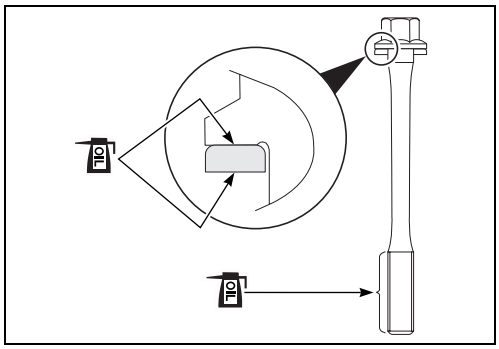

- With the cylinder head snugly seated on the cylinder, secure it by tightening the cylinder head bolts ⑤ in diagonal stages.
- Tighten the cylinder head bolts ⑤ to the specified torque.

Cylinder head bolt: Initial 25 N·m (2.5 kgf-m, 18.0 lbf-ft)
Final 51 N·m (5.1 kgf-m, 37.0 lbf-ft)

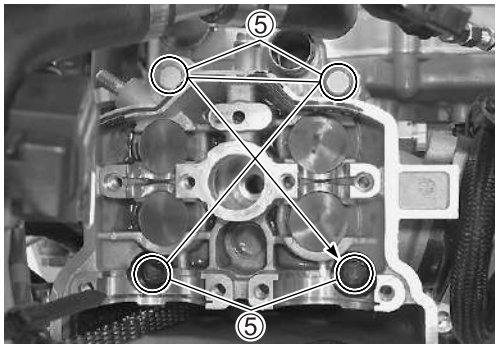

- After tightening the cylinder head bolts to specification, tighten the cylinder head base bolts ⑥ and cylinder base bolt ⑦ to the specified torque.

NOTE:
Face the tip of clamp ⑧ as shown and clamp the breather hose No.3.

Cylinder head base bolt: 10 N·m (1.0 kgf-m, 7.0 lbf-ft)
Cylinder base bolt: 10 N·m (1.0 kgf-m, 7.0 lbf-ft)

- Clamp the breather hose No.1 ⑨.

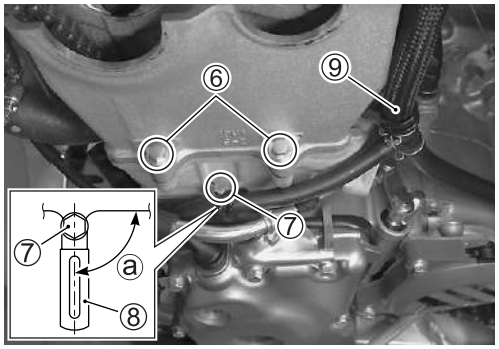

ⓐ 90 ± 10°

- Install the engine mounting upper brackets. (☞4-8)
- Connect the ECT sensor coupler.
- Connect the radiator hose. (☞5-16)
- Install the exhaust pipe. (☞4-12)
- Install the throttle body. (☞4-49)

CAMSHAFT (AUTOMATIC DECOMP.) AND CAM CHAIN TENSION ADJUSTER INSTALLATION

Install the camshaft and cam chain tension adjuster in the reverse order of removal. Pay attention to the following points:

Camshaft (Automatic Decomp.)

- Place a wrench over the crankshaft and turn it counterclockwise to align the TDC mark Ⓐ with the grooves Ⓑ of the timing inspection hole. Also, hold this position.

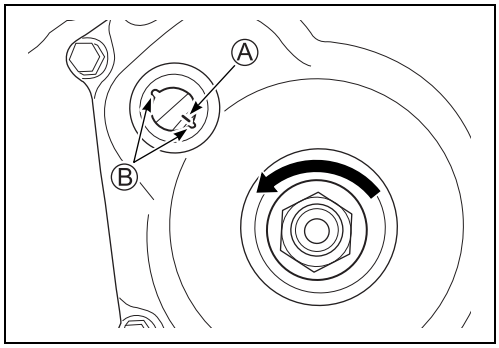

NOTE:

Pull the cam chain upward, or the chain will be caught between crankcase and cam drive sprocket.

- Just before installing the camshaft into the cylinder head, apply molybdenum oil solution to the camshaft journals, camshaft journal holder and cam faces. Also, apply engine oil to the camshaft bearings.

MOLYBDENUM OIL SOLUTION

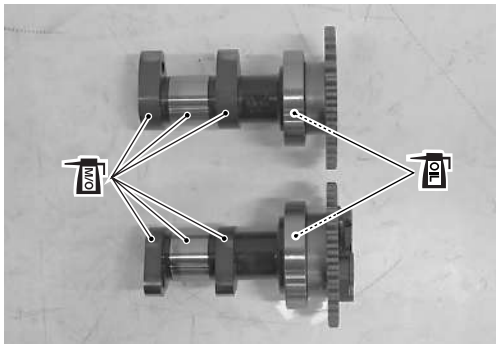

- Pull the exhaust side of the cam chain taut to install the camshaft sprocket (exhaust side).
- Turn the exhaust camshaft so that the timing mark Ⓒ is aligned with the gasket surface of the cylinder head. Engage the cam chain with the exhaust camshaft sprocket.
- The other timing marked Ⓓ should now be pointing straight up.
- Starting from the roller pin that is directly above the timing marked Ⓓ, count out 13 roller pins (from the exhaust camshaft side going towards the intake camshaft side). Engage the 13th roller pin on the cam chain with the timing marked Ⓔ on the camshaft sprocket (intake side). Refer to the following illustrations.

NOTE:
The cam chain should now be on all three sprockets. Be careful not to move the crankshaft until the camshaft journal holder and cam chain tension adjuster are secured.

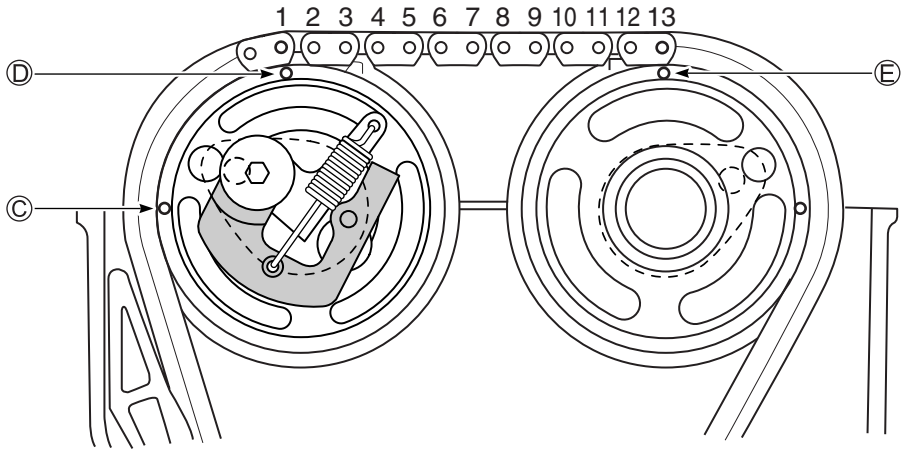

- Install the dowel pins ① and C-rings ②.
- Install the camshafts, intake ④ and exhaust ③.

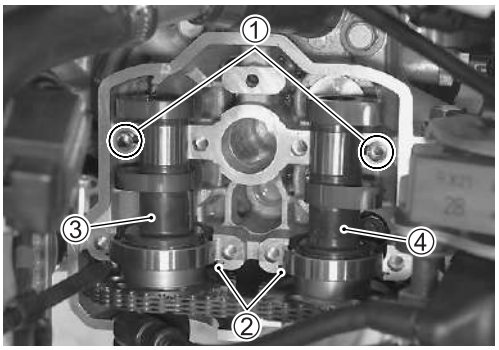

- Apply grease to the new O-ring ⑤ and install it to the camshaft journal holder ⑥.

NOTE:
Replace the O-ring ⑤ with a new one.

99000-25011: SUZUKI SUPER GREASE "A" or equivalent

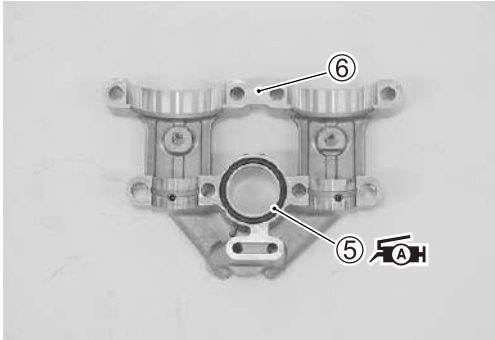

- Install the camshaft journal holder ⑥.
- Have the camshaft journal holder evenly by tightening the camshaft journal holder bolts lightly, in the ascending order of numbers.

NOTE:
** When tightening the camshaft journal holder bolts, the position must be at TDC on the compression stroke.*
** The ascending order of numbers are indicated on the camshaft journal holder.*

- Tighten the camshaft journal holder bolts in ascending order of numbers to the specified torque.

Camshaft journal holder bolt:10 N·m (1.0 kgf-m, 7.0 lbf-ft)

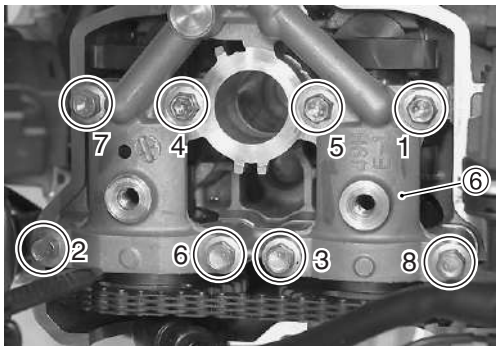

Cam Chain Tension Adjuster

- Apply grease to the new O-ring ①.

NOTE:

Replace the O-ring ① with a new one.

99000-25011: SUZUKI SUPER GREASE "A" or equivalent

- Turn the adjusting screw counterclockwise fully with a 3 mm hexagon wrench Ⓐ.

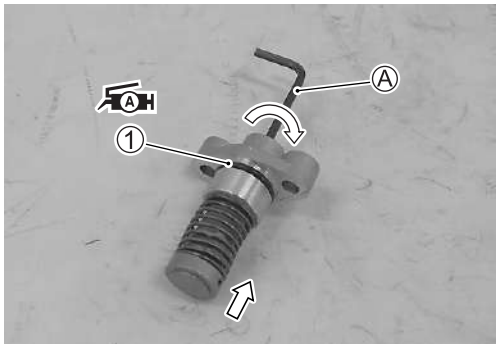

- Install the cam chain tension adjuster ② while inserting the hexagon wrench Ⓐ.
- Tighten the cam chain tension adjuster mounting bolts ③ to the specified torque.

Cam chain tension adjuster mounting bolt: 10 N·m (1.0 kgf-m, 7.0 lb-ft)

- Pull out the hexagon wrench Ⓐ to unlock.

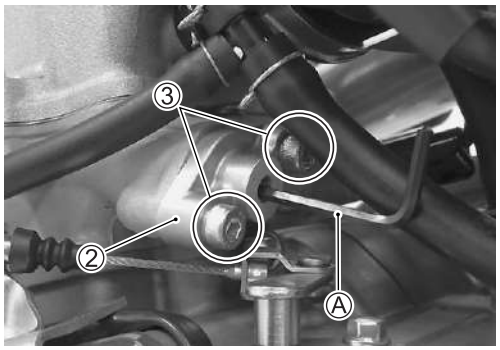

- Install the new gasket ④ and cam chain tension adjuster cap bolt ⑤.

NOTE:
Replace the gasket ④ with a new one.

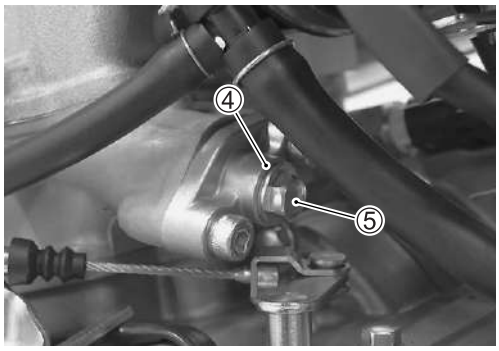

- Tighten the cam chain tension adjuster cap bolt ⑤ to the specified torque.

Cam chain tension adjuster cap bolt:
5.5 N·m (0.55 kgf-m, 4.0 lb-ft)

NOTE:
After installing the cam chain tension adjuster, check to be sure that the adjuster works properly by checking the slack of cam chain.

- After installing the cam chain tension adjuster, rotate the crankshaft (two turns), and recheck the positions of the camshafts. (☞4-26)

NOTE:
After this procedure, if any resistance is felt while turning over the crankshaft, stop immediately, and check the camshaft chain timing.

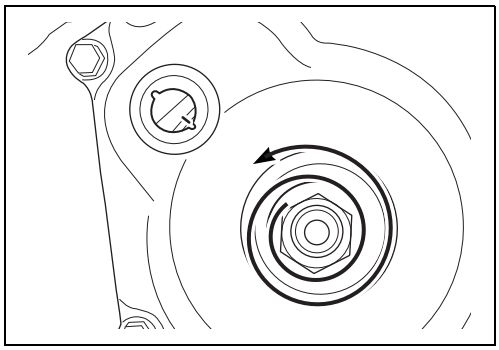

- Inspect the valve clearance. (☞2-32)

- Apply grease to the new O-rings ⑥.

NOTE:
Replace the O-rings ⑥ with new ones.

99000-25011: SUZUKI SUPER GREASE "A" or equivalent

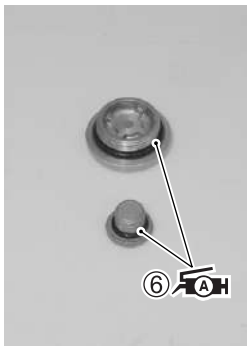

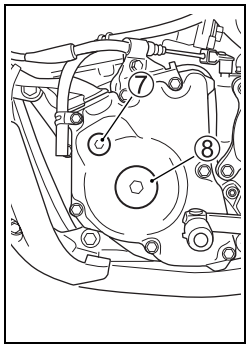

- Tighten the TDC plug ⑦ and crankshaft hole plug ⑧ to the specified torque.

TDC plug: 14 N·m (1.4 kgf-m, 10.0 lbf-ft)
Crankshaft hole plug: 11 N·m (1.1 kgf-m, 8.0 lbf-ft)

- Install the condenser.

CYLINDER HEAD COVER INSTALLATION

Install the cylinder head cover in the reverse order of removal. Pay attention to the following points:

- Install the new cylinder head cover No.2 gasket ①.

NOTE:

** Replace the cylinder head cover No.2 gasket ① with a new one.*

** Fit the protrusions Ⓐ of the cylinder head cover No.2 gasket ① to the stopper grooves Ⓑ.*

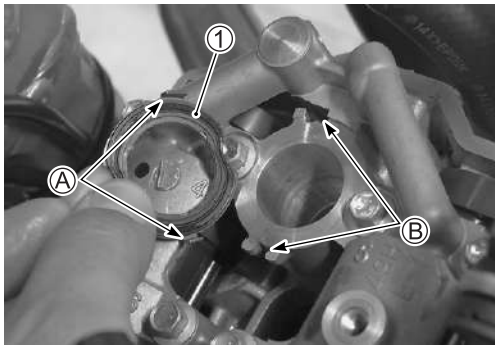

- Install the new cylinder head cover gasket ② to the cylinder head cover ③.

NOTE:

Replace the cylinder head cover gasket ② with a new one.

- Apply bond to the cylinder head cover gasket ② as shown.

1207B 99000-31140: SUZUKI BOND "1207B" or equivalent

- Install the cam chain No.2 guide ④ to the cylinder head cover ③ tightly.

NOTE:

If there is looseness in the joints between the cylinder head cover and the cam chain No.2 guide, replace the cam chain No.2 guide with a new one.

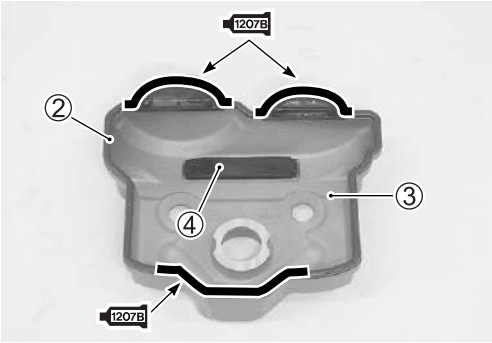

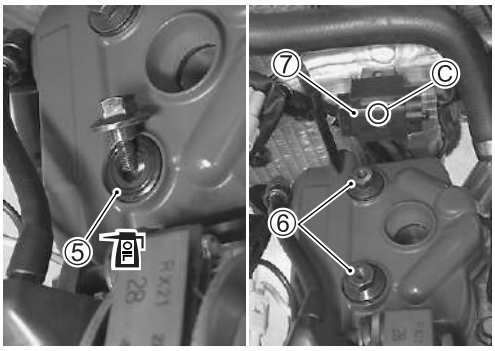

- Place the cylinder head cover on the cylinder head.
- Apply engine oil to both sides of gaskets ⑤.

NOTE:
Replace the gaskets ⑤ with new ones.

- Tighten the cylinder head cover bolts ⑥ to the specified torque.

Cylinder head cover bolt: 14 N·m (1.4 kgf-m, 10.0 lbf-ft)

- Install the TO sensor ⑦.

NOTE:
When installing the TO sensor ⑦, the arrow mark Ⓒ must be pointed upward.

- Install the spark plug and spark plug cap. (☞2-9)
- Install the radiator covers and fuel tank.
- Install the seat.

INSPECTION AFTER INSTALLATION

- Engine oil level and oil leakage (☞2-15)
- Engine coolant level and coolant leakage (☞2-23, -24)
- Fuel leakage
- Exhaust gas leakage
- Throttle cable play (☞2-26)
- Clutch cable play (☞2-25)
- Wiring harness, cable and hose routing (☞5-10 to -16)

CAM CHAIN, CAM CHAIN TENSIONER AND CAM CHAIN No.1 GUIDE

REMOVAL

- Remove the cylinder head. (☞4-16)
- Remove the magneto cover and magnet rotor. (☞4-52)
- Remove the cam chain No.1 guide ①.
- Remove the cam chain guide retainer ③ by removing its bolt ②.
- Remove the cam chain ④.

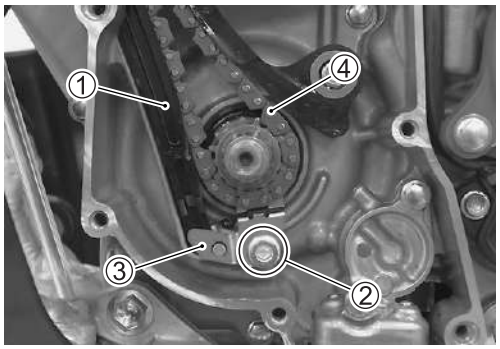

- Remove the spacer ⑥ and cam chain tensioner ⑦ by removing the bolt ⑤.

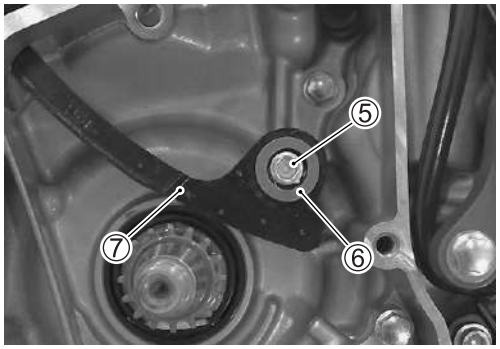

INSTALLATION

Install the cam chain, cam chain tensioner and cam chain No.1 guide in the reverse order of removal. Pay attention to the following points:

- Install the cam chain tensioner ①, spacer ② and cam chain tensioner bolt ③.
- Tighten the cam chain tensioner bolt ③ to the specified torque.

Cam chain tensioner bolt: 10 N·m (1.0 kgf-m, 7.0 lbf-ft)

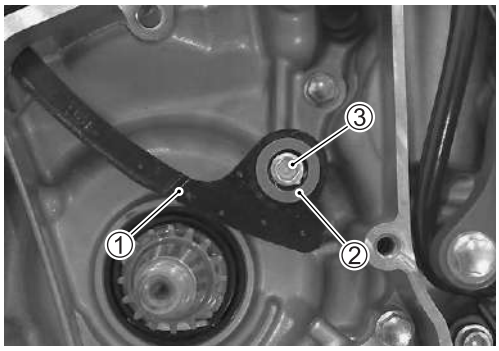

- Install the cam chain ④ to the cam chain drive sprocket.

NOTE:
Make sure that cam chain engages properly to the cam chain drive sprocket.

- Install the cam chain guide retainer ⑤ and tighten the cam chain guide retainer bolt ⑥ to the specified torque.

Cam chain guide retainer bolt: 10 N·m (1.0 kgf-m, 7.0 lbf-ft)

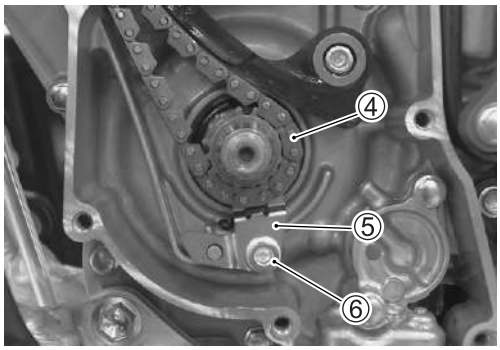

- Insert the cam chain No.1 guide end Ⓐ into the recess Ⓑ of the crankcase securely.
- Fit the projection Ⓒ of the cam chain No.1 guide ⑦ in the groove Ⓓ of the cylinder.
- Install the magneto rotor and magneto cover. (☞4-54)
- Install the cylinder head and cylinder head cover. (☞4-22 to -30)

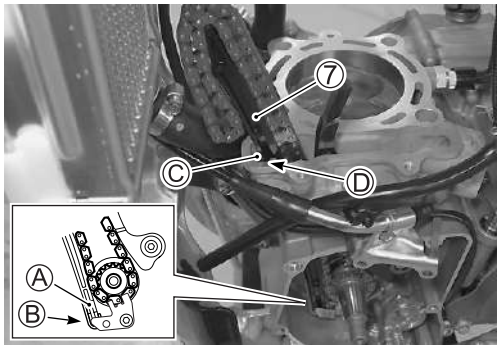

CLUTCH

CLUTCH PLATE

REMOVAL

- Drain engine oil. (☞2-16)
- Remove the brake pedal. (☞4-72)
- Remove the clutch cover ① and its gasket ②.

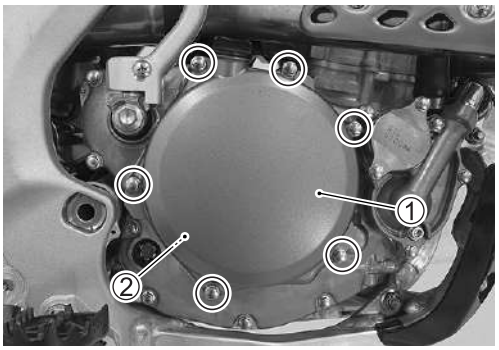

- Remove the clutch spring set bolts ③ and clutch springs.

NOTE:
Loosen the clutch spring set bolts ③ little by little and diagonally.

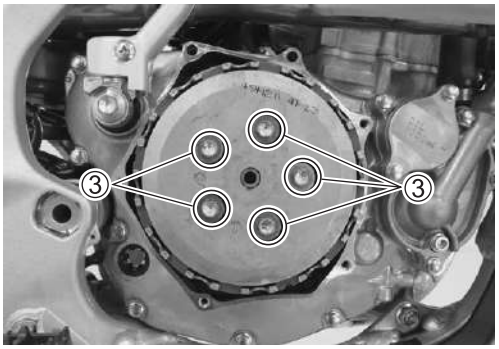

- Remove the clutch pressure plate ④, washer ⑤, bearing ⑥ and push piece ⑦.

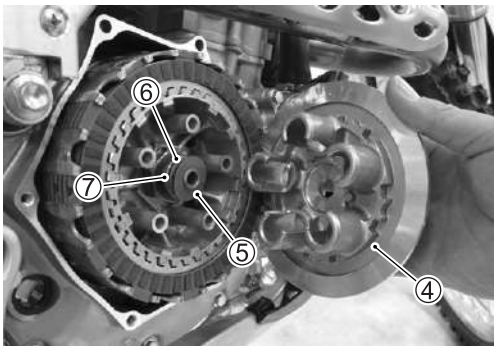

- Remove the push rod ⑧.

NOTE:
If it is difficult to pull out the push rod ⑧, use a magnetic hand or a wire.

- Remove the clutch drive plates ⑨ and driven plates ⑩.

NOTE:
Mark the paint mark ⓐ to the clutch driven No. 2 plate.

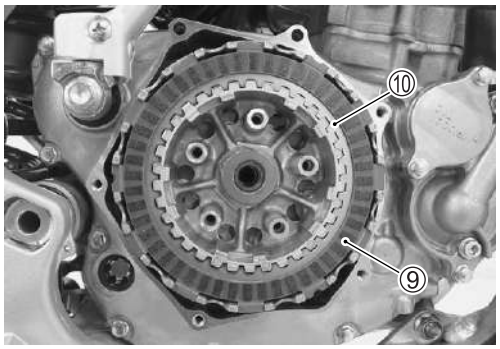

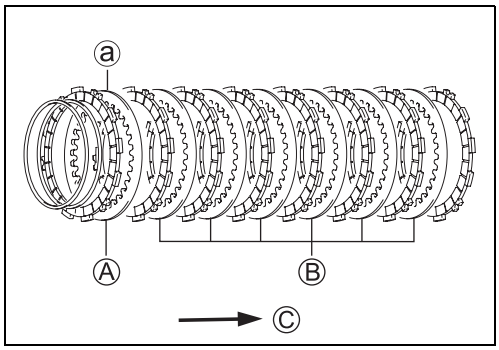

Ⓐ Clutch driven No. 2 plate
Ⓑ Clutch driven No. 1 plate
Ⓒ Direction of outside

- Remove the spring washer ⑪ and spring washer seat ⑫.

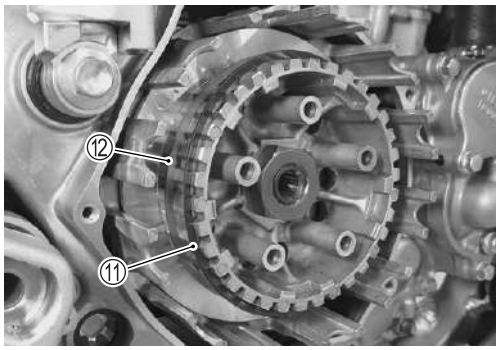

INSPECTION

Drive Plate

- Measure the drive plate thickness.

DATA Drive plate thickness
Service Limit: 2.42 mm (0.095 in)

TOOL 09900-20101: Vernier calipers (150 mm)

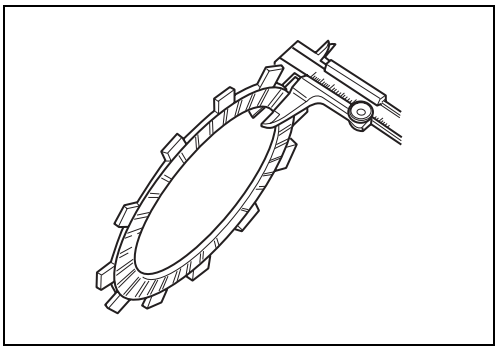

- Inspect the drive plates for wear, distortion and discoloration.
- If the drive plate thickness is found to have reached the limit, replace it with a new one.

- Measure the drive plate claw width.
- Replace the drive plates found to have worn down to the limit.

DATA Drive plate claw width
Service Limit: 13.05 mm (0.514 in)

TOOL 09900-20101: Vernier calipers (150 mm)

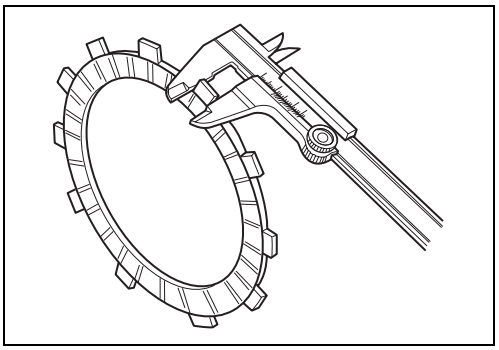

Driven Plate

- Measure the driven plate distortion.

DATA Driven plate distortion
Service Limit: 0.10 mm (0.004 in)

TOOL 09900-20803: Thickness gauge

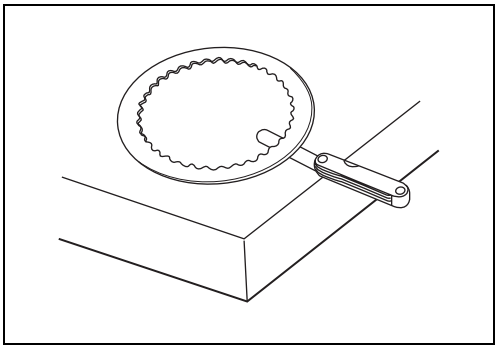

- Inspect the driven plates for wear and discoloration.
- Replace driven plates which exceed the limit.

Clutch Spring

- Measure the clutch spring free length.
- Replace all the springs if any spring is not within the limit.

DATA Clutch spring free length
Service Limit: 48.2 mm (1.90 in)

TOOL 09900-20101: Vernier calipers (150 mm)

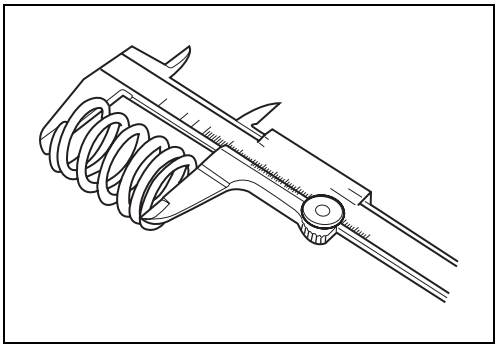

NOTE:
Replace five clutch springs together even if only one spring is beyond the service limit.

Push Rod

- Inspect the push rod for wear and damage.
- If any defects are found, replace the push rod with a new one.

Release Bearing

- Inspect the clutch release bearing ① for any abnormality, particularly cracks, to decide whether it can be reused or should be replaced.
- Smooth engagement and disengagement of the clutch depends on the condition of this bearing.
- If any defects are found, replace the clutch release bearing with a new one.

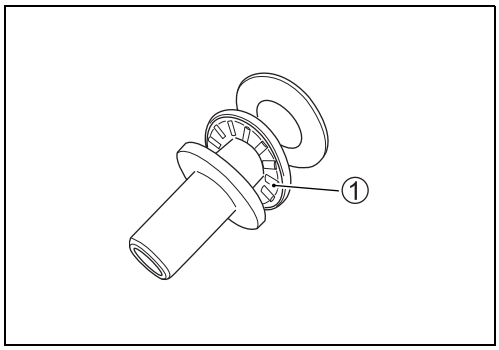

INSTALLATION

Install the clutch plates in the reverse order of removal. Pay attention to the following points:

- Install the spring washer seat ① and spring washer ② onto the clutch sleeve hub correctly.

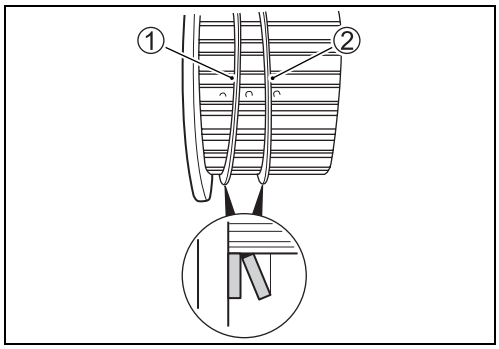

- Apply engine oil to the drive plates ③ and driven plates ④.
- Install the clutch drive plates and driven plates one by one into the clutch sleeve hub in the prescribed order as show in illustration.

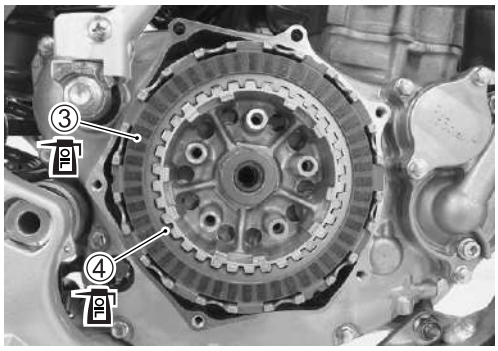

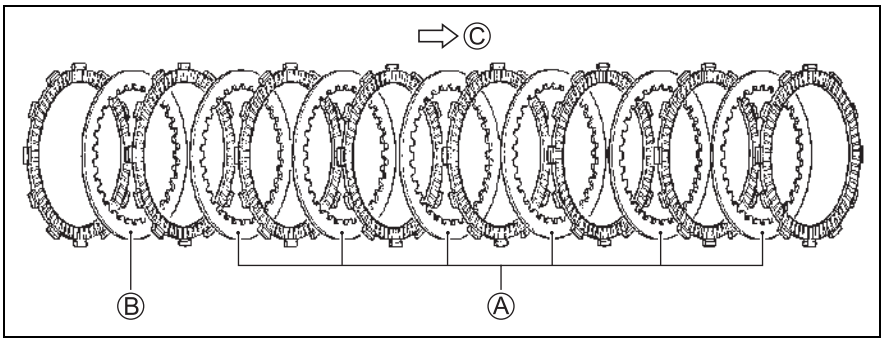

		Color
Ⓐ	Driven No.1 plate	Silver
Ⓑ	Driven No.2 plate	Gray
Ⓒ	Direction of outside	

- Install the push rod and push piece ⑤.
- Apply engine oil to the release bearing ⑥.
- Install the release bearing ⑥ and washer ⑦ as shown.
- Fit the clutch pressure plate ⑧.

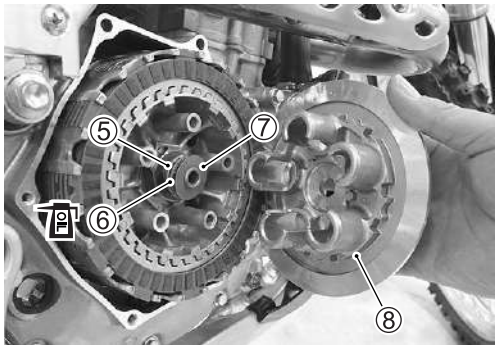

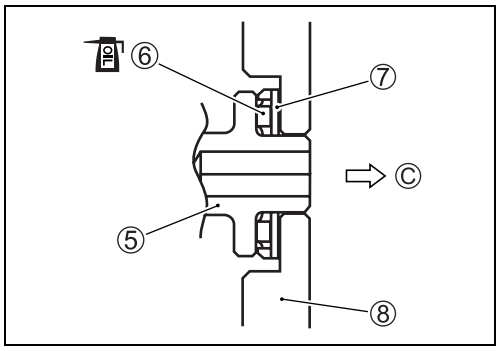

Ⓒ Direction of outside

- Install the clutch springs and clutch spring set bolts ⑨.
- Tighten the clutch spring set bolts ⑨ to the specified torque.

NOTE:
Tighten the clutch spring set bolts ⑨ diagonally.

Clutch spring set bolt: 10 N·m (1.0 kgf-m, 7.0 lbf-ft)

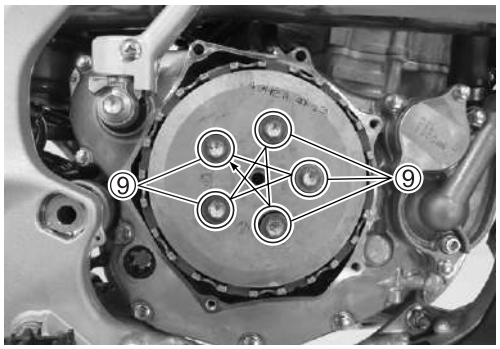

- Install the new gasket ⑩ and clutch cover ⑪.

NOTE:
Replace the gasket ⑩ with a new one.

- Tighten the clutch cover bolts ⑫ diagonally to the specified torque.

Clutch cover bolt: 11 N·m (1.1 kgf-m, 8.0 lbf-ft)

- Install the brake pedal. (☞4-72)

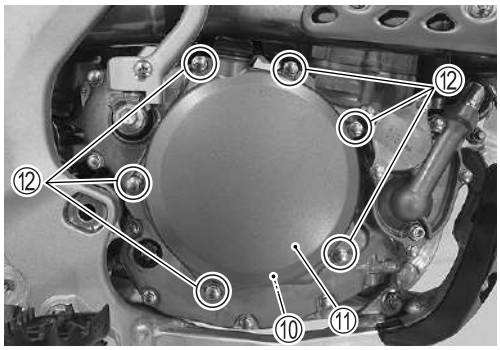

INSPECTION AFTER INSTALLATION

- Engine oil level and oil leakage (☞2-15)
- Clutch cable play (☞2-25)
- Smooth operation of clutch system

PRIMARY DRIVEN GEAR AND CLUTCH SLEEVE HUB

REMOVAL

- Remove the clutch cover. (☞4-34)
- Remove the pressure plate and clutch plates. (☞4-34)
- Flatten the lock washer ①.

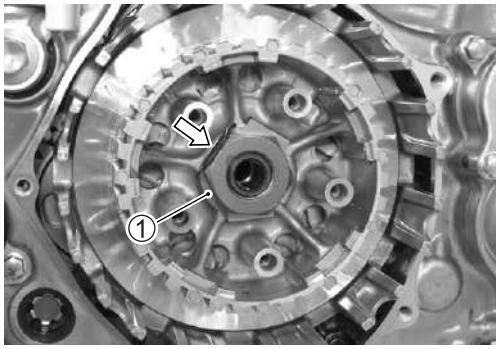

- Hold the clutch sleeve hub ③ with the special tools and loosen the clutch sleeve hub nut ②.

TOOL 09920-53740: Clutch sleeve hub holder
09920-31020: Extension handle

- Remove the nut ②, lock washer ① and clutch sleeve hub ③.

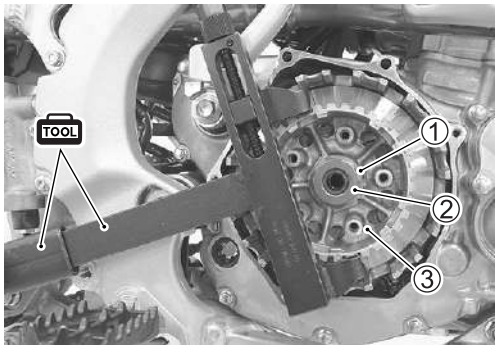

- Remove the washer ④ and primary driven gear ⑤.

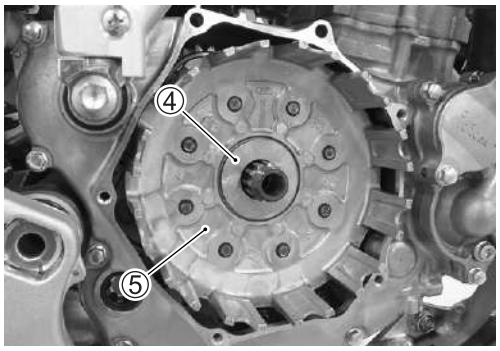

- Remove the needle bearing ⑥ and spacer ⑦.

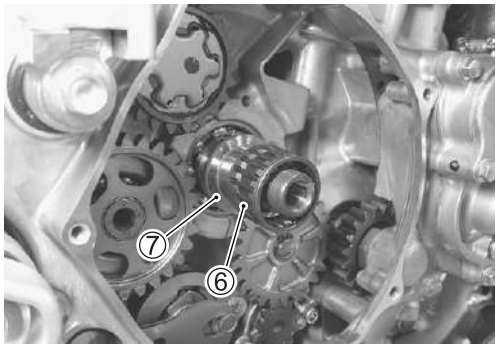

INSPECTION

- Inspect the clutch sleeve hub and primary driven gear for wear and cracks.
- If any defects are found, replace the sleeve hub or driven gear with a new one.

- Inspect the needle bearing and spacer for damage and wear.
- If any defects are found, replace the bearing or spacer with a new one.

INSTALLATION

Install the primary driven gear and clutch sleeve hub in the reverse order of removal. Pay attention to the following points:

- Apply engine oil to the spacer ① and needle bearing ②.
- Install the spacer ① and needle bearing ②.

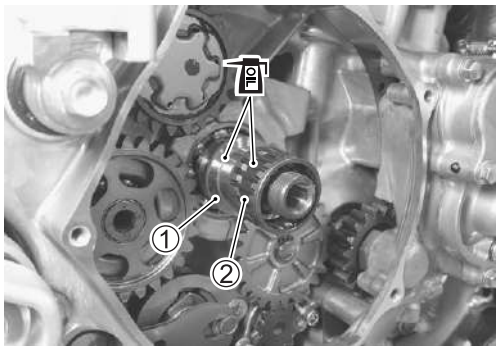

- Install the primary driven gear ③.
- Install the washer ④.

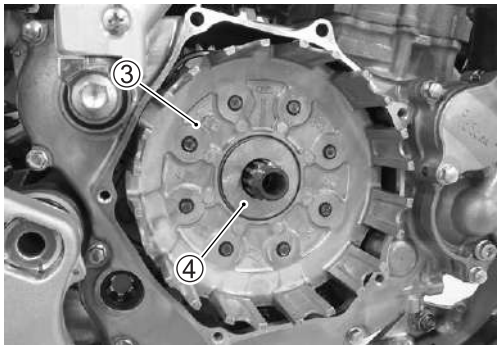

- Fit the clutch sleeve hub ⑤, new lock washer ⑥ and clutch sleeve hub nut ⑦.

NOTE:
Replace the lock washer ⑥ with a new one.

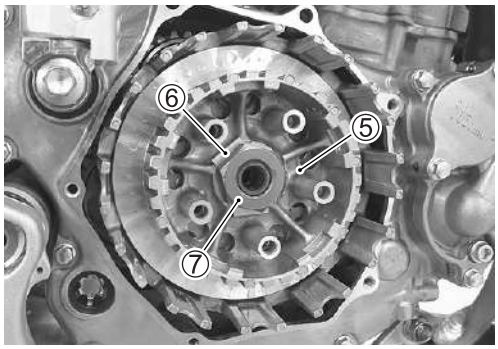

- Hold the clutch sleeve hub ⑤ with the special tools and tighten the clutch sleeve hub nut ⑦ to the specified torque.

TOOL 09920-53740: Clutch sleeve hub holder
09920-31020: Extension handle

Clutch sleeve hub nut: 90 N·m (9.0 kgf-m, 65.0 lbf-ft)

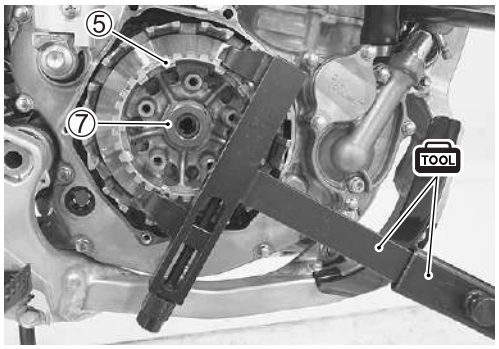

- Make sure the clutch sleeve hub for smooth movement.
- Bend the lock washer to secure the nut.

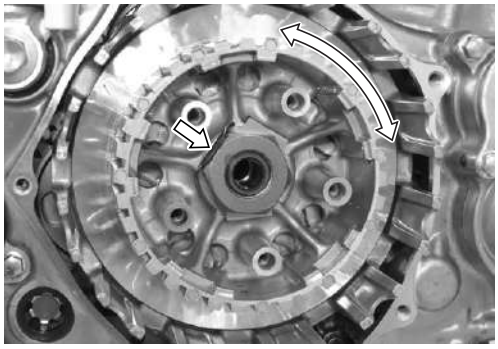

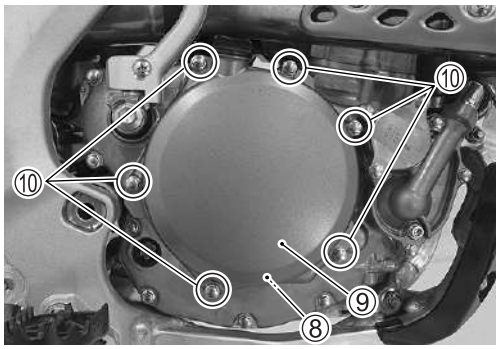

- Install the clutch plates and pressure plate. (☞4-37)
- Install the new gasket ⑧ and clutch cover ⑨.

NOTE:
Replace the gasket ⑧ with a new one.

- Tighten the clutch cover bolts ⑩ diagonally to the specified torque.

Clutch cover bolt: 11 N·m (1.1 kgf-m, 8.0 lbf-ft)

- Install the brake pedal. (☞4-72)

INSPECTION AFTER INSTALLATION

- Engine oil level and oil leakage (☞2-15)
- Clutch cable play (☞2-25)
- Smooth operation of clutch system

CLUTCH RELEASE CAMSHAFT

REMOVAL

- Disconnect the clutch cable ①.

NOTE:
Loosen the clutch cable adjuster when disconnecting.

- Remove the retainer ③ by removing its bolt ②.
- Pull the clutch release camshaft ④ out of crankcase.

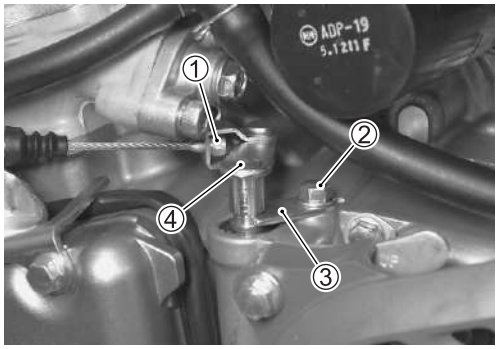

INSPECTION

Clutch Release Camshaft

- Inspect the clutch release camshaft for abnormal deflection and damage.
- If any defects are found, replace the release camshaft with a new one.

Oil Seal And Bearing

- Inspect the oil seal ① for oil leakage and oil seal lip damage.
- Inspect the bearings ② for play and smooth movement.
- If necessary, replace the defective parts with a new one.

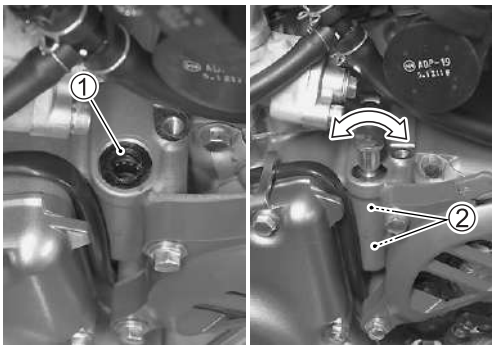

INSTALLATION

Install the clutch release camshaft in the reverse order of removal. Pay attention to the following points:

- Apply moly paste to the clutch release camshaft ①.

99000-25140: SUZUKI MOLY PASTE or equivalent

- Apply grease to the oil seal lip.

99000-25011: SUZUKI SUPER GREASE "A" or equivalent

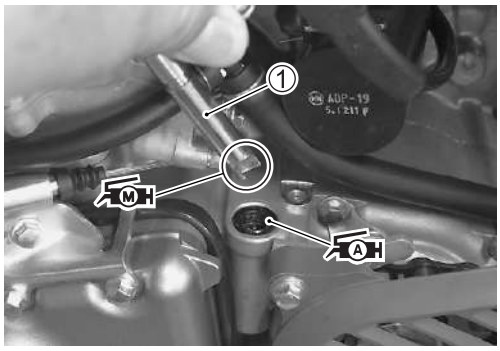

- Install the clutch release camshaft ① and connect the clutch cable ②.
- Install the retainer ③ and tighten the retainer bolt ④.

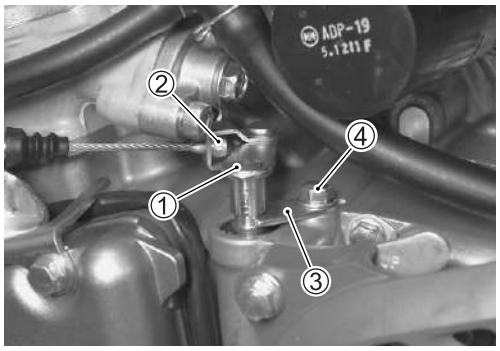

INSPECTION AFTER INSTALLATION

- Engine oil level and oil leakage (☞2-15)
- Clutch cable play (☞2-25)
- Smooth operation of clutch system

KICK STARTER LEVER

REMOVAL

- Remove the kick starter lever ② by removing its bolt ①.

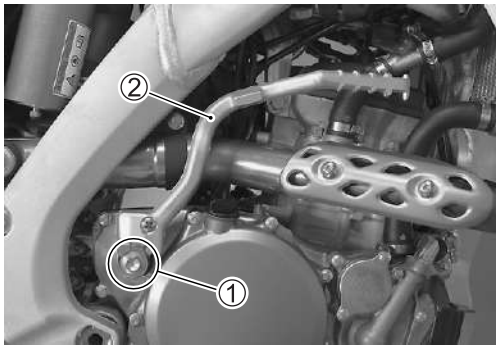

INSTALLATION

- Install the kick starter lever ② onto the kick starter shaft.

NOTE:
When installing the kick starter lever ②, align the wide spline teeth Ⓐ and Ⓑ.

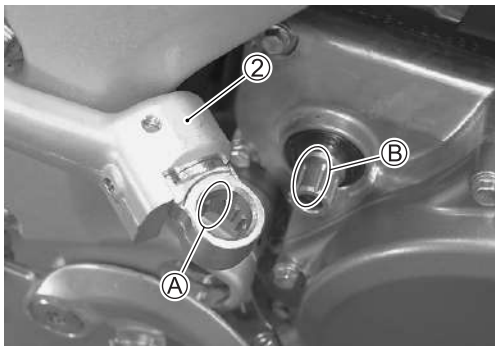

- Apply a small quantity of thread lock to the kick starter lever bolt ① and tighten it to the specified torque.

1303B 99000-32030: THREAD LOCK CEMENT "1303B" or equivalent

Kick starter lever bolt: 29 N·m (2.9 kgf-m, 21.0 lbf-ft)

- Install the brake pedal. (☞4-72)

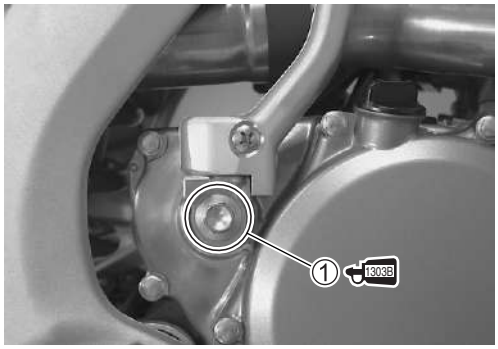

THROTTLE BODY

REMOVAL

- Remove the seat and radiator covers. (☞4-2)
- Remove the fuel tank. (☞4-2)
- Disconnect the TP sensor coupler ①.
- Release the clamp ② and disconnect condenser coupler ③.

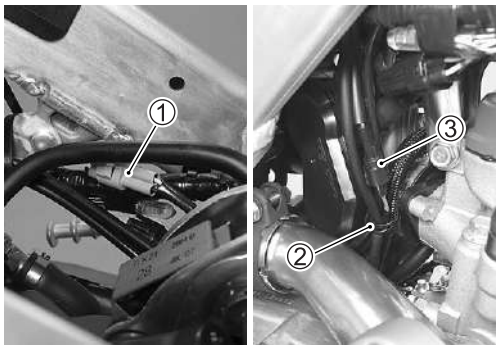

- Remove the condenser ④.

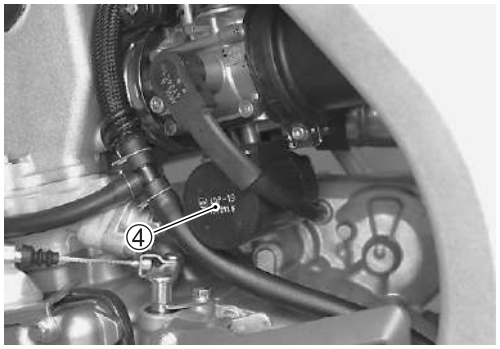

- Remove the throttle cable cover ⑥ by removing its bolts ⑤.

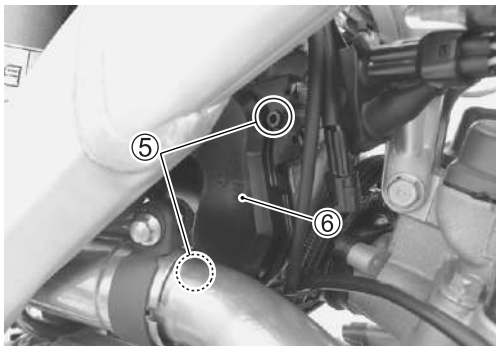

- Loosen the lock-nuts ⑦.
- Disconnect the throttle cables from the pulley.

NOTICE
Snapping down the throttle valve with the throttle cable released can damage the throttle valve and throttle body. **Do not snap down the throttle valve.**

NOTE:
Do not apply pressured water to the throttle cable cover drain as muddy water can get into cover. If muddy water get into cover, clean it.

- Loosen the clamp screws ⑧.
- Move the air cleaner outlet tube backward.
- Move the throttle body assembly to left side.

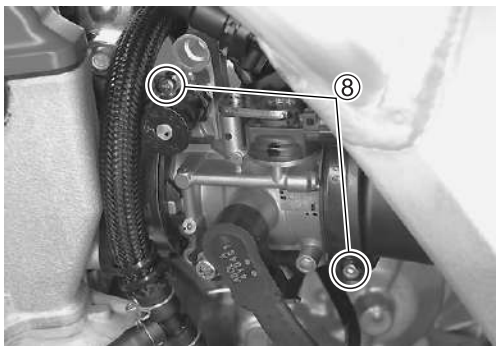

- Disconnect the IAP sensor coupler ⑨, fuel injector coupler ⑩ and fuel hose ⑪.
- Remove the throttle body assembly.

NOTE:
Do not put force on the TP sensor when removing the throttle body assembly, or the TP sensor position will be moved.

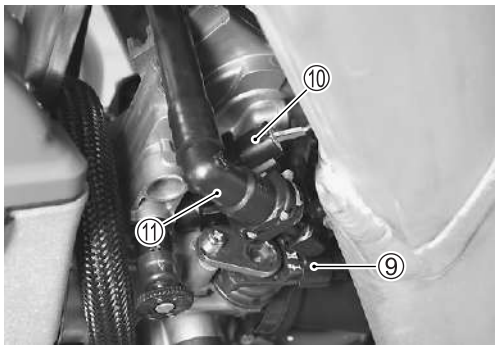

INSTALLATION

Install the throttle body assembly in the reverse order of removal. Pay attention to the following points:

- Fit the projection Ⓐ on the throttle body in the depression of the intake pipe.
- Position the clamps correctly and tighten the screws ①. (☞5-14)

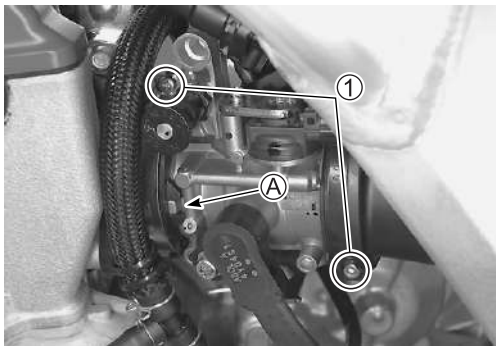

- Connect the throttle pulling cable ② and throttle returning cable ③ to the pulley.

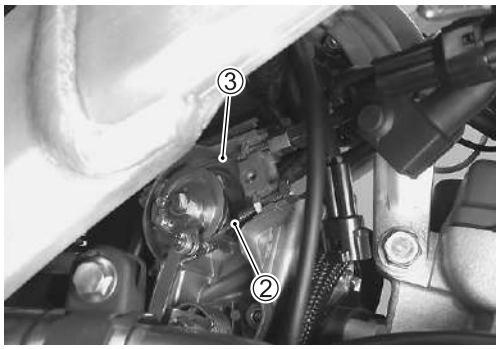

- Turn in each throttle cable adjuster fully and locate each outer cable so that the clearance ⓐ is 0 – 1.5 mm (0 – 0.06 in).
- Tighten each lock-nut ④ to the specified torque.

Cable adjuster lock-nut: 4.5 N·m (0.45 kgf-m, 3.25 lbf-ft)

- Adjust the throttle cable play. (☞2-26)

ⓐ 0 – 1.5 mm (0 – 0.06 in)

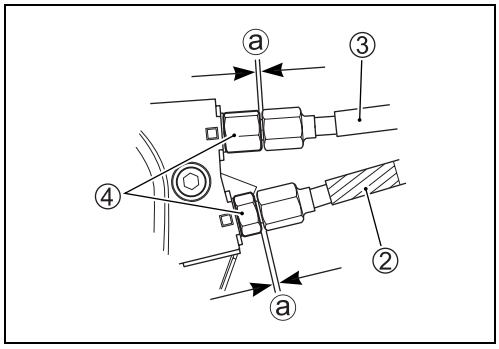

INSPECTION AFTER INSTALLATION

- Wiring harness, cable and hose routing (☞5-10 to -14)
- Fuel leakage
- Throttle cable play (☞2-26)
- Engine idle speed (☞2-29)
- TP sensor setting condition (☞4-50)

TP SENSOR ADJUSTMENT

1. Connect a 12 volt battery to the service coupler ① using the battery lead wire ②.

   36890-28H00: Battery lead wire (option)

2. Loosen the TP sensor mounting screw ③.
3. Insert the needle point probes to the TP sensor lead wire coupler ⑤.
4. Adjust the TP sensor ④ until the output voltage comes within the specified value.
5. Then, tighten the TP sensor mounting screw ③ to fix the TP sensor ④.

DATA TP sensor output voltage: 0.60 – 0.64 V
(⊕ Y – ⊖ B/Br)

TOOL 09900-25008: Multi circuit tester set
09900-25009: Needle point probe set

TP sensor mounting screw: 3.5 N·m (0.35 kgf-m, 2.5 lbf-ft)

6. Check the engine starting operation and engine idle speed.(☞2-29)

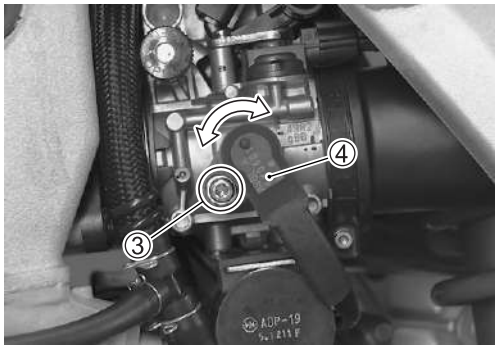

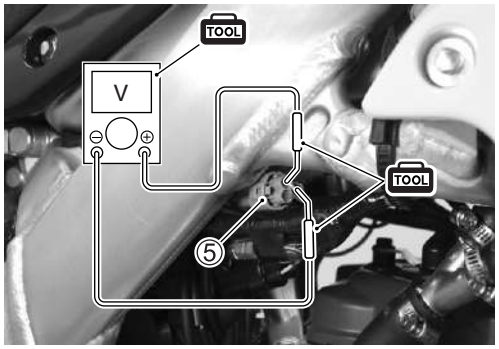

ENGINE COOLANT

REPLACEMENT

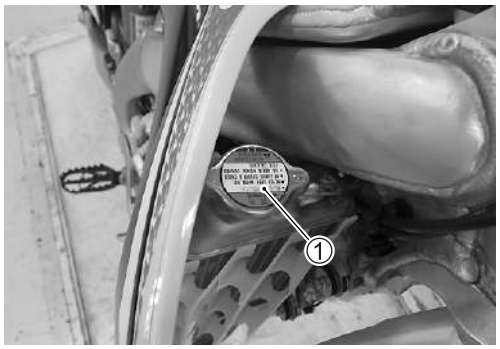

⚠ WARNING

Engine coolant is harmful if swallowed or if it comes in contact with your skin or eyes.

Keep engine coolant away from children and pets. Call your doctor immediately if engine coolant is swallowed and induce vomiting. Flush eyes or skin with water if engine coolant gets in eyes or comes in contact with skin.

⚠ WARNING

You can be injured by scalding fluid or stream if you open the radiator cap when the engine is hot.

Do not open the radiator cap when the engine is hot.

Wait until engine cools.

- Open the radiator cap ①.

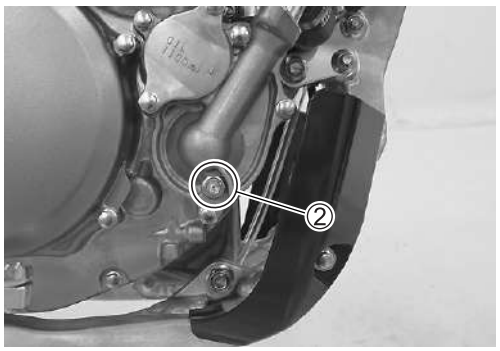

- Remove the engine coolant drain bolt ② and drain engine coolant.
- Install the new gasket washer and tighten the engine coolant drain bolt ② to the specified torque.

NOTE:
Replace the gasket washer with a new one.

Engine coolant drain bolt: 11 N·m (1.1 kgf-m, 8.0 lbf-ft)

- Pour specified engine coolant up to the bottom of filler hole. (☞2-23)

DATA Engine coolant capacity: 950 ml (1.0/0.8 US/Imp qt)

- Swing the motorcycle to the right and left two times or more so as to breed air from the radiator.
- Add specified engine coolant up to the radiator inlet.
- Tighten the radiator cap securely.
- After warming up and cooling down the engine, add specified engine coolant.

ELECTRICAL SYSTEM

MAGNETO ROTOR

REMOVAL

- Drain engine oil. (☞2-16)
- Disconnect the magneto lead wire coupler ①.
- Remove the clamps ②.

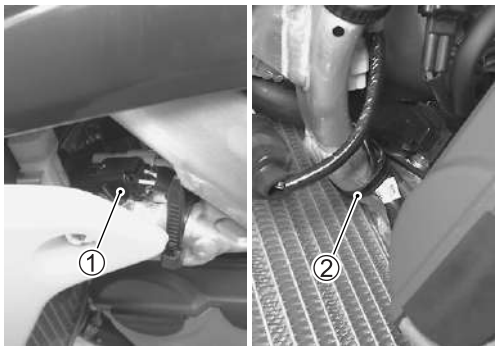

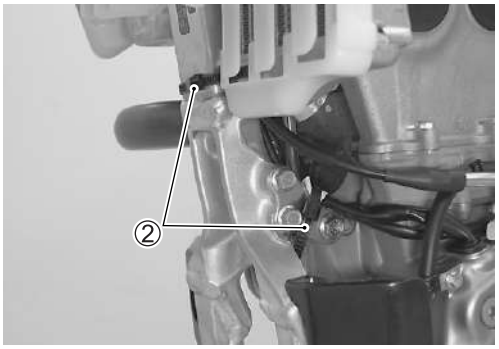

- Remove the gearshift lever. (☞4-6)
- Remove the magneto cover ④ by removing its bolts ③.

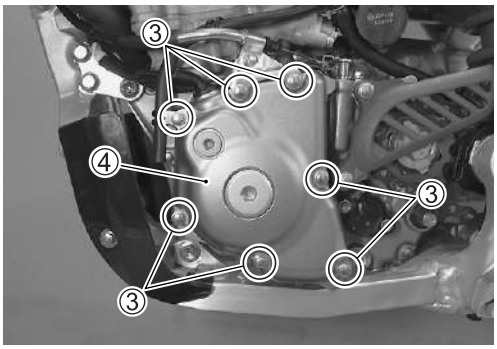

- Remove the gasket ⑤ and dowel pins ⑥.

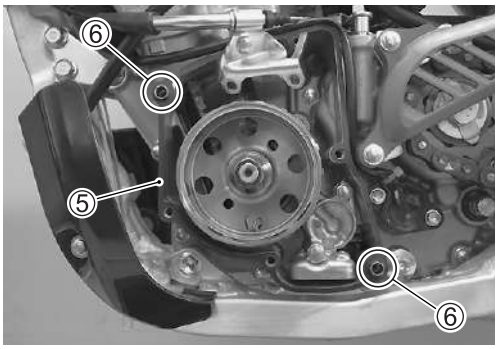

- Hold the magneto rotor with the special tool and remove the magneto rotor nut ⑦.

TOOL 09930-44561: Rotor holder

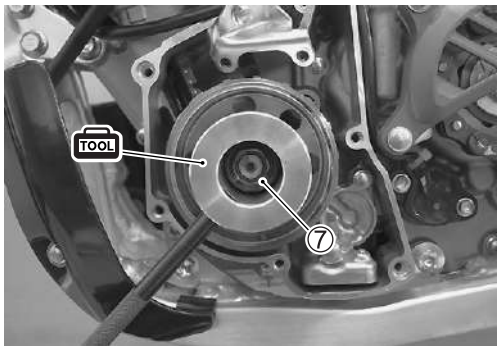

- Remove the magneto rotor ⑧ with the special tool.

TOOL 09930-34951: Rotor remover

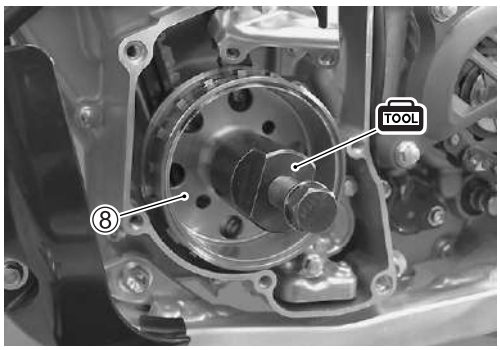

- Remove the magneto rotor key ⑨.

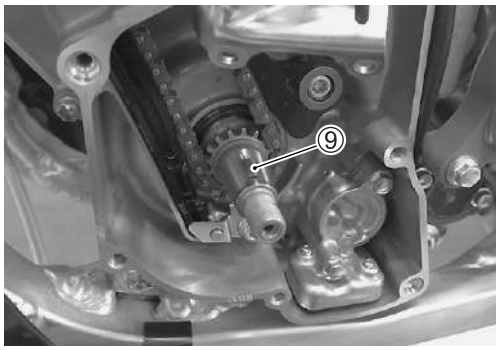

INSTALLATION

- Remove any grease from the tapered portion Ⓐ of the magneto rotor and crankshaft Ⓑ.
- Fit the magneto rotor key ① to the crankshaft.

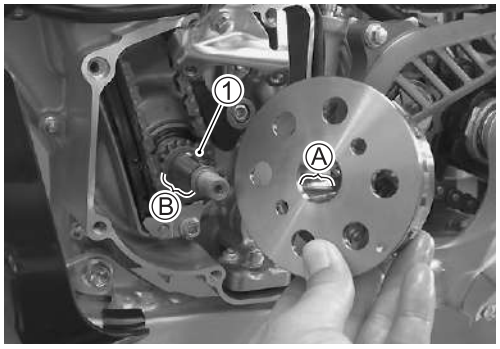

- Install the magneto rotor.
- Hold the magneto rotor with the special tool and tighten the magneto rotor nut ② to the specified torque.

Magneto rotor nut: 80 N·m (8.0 kgf-m, 58.0 lbf-ft)

09930-44561: Rotor holder

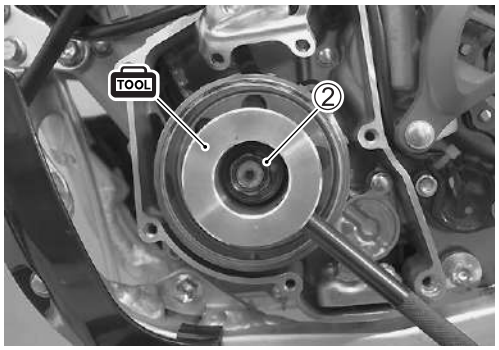

- Install the dowel pins ③ and new gasket ④.

NOTE:
Replace the gasket ④ with a new one.

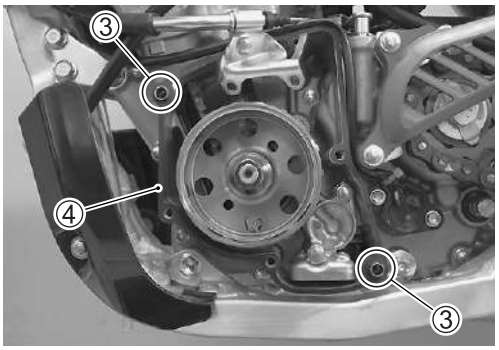

- Install the magneto cover ⑤.
- Tighten the magneto cover bolts (Ⓐ,Ⓑ,Ⓒ) to the specified torque.

NOTE:
** The bolts Ⓐ are 5 mm longer than the others.*
** Fit the clutch cable bracket to the bolt Ⓑ.*
** Fit the clamp ⑥ to the bolt.*

Magneto cover bolt: 11 N·m (1.1 kgf-m, 8.0 lbf-ft)

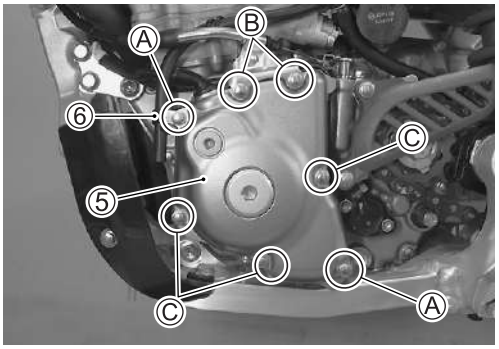

- Install the gearshift lever. (☞4-11)
- Pour engine oil. (☞2-16)

FRONT AND REAR WHEELS

FRONT WHEEL

REMOVAL

- Remove the front axle nut ①.
- Loosen the left axle holder bolts ②.

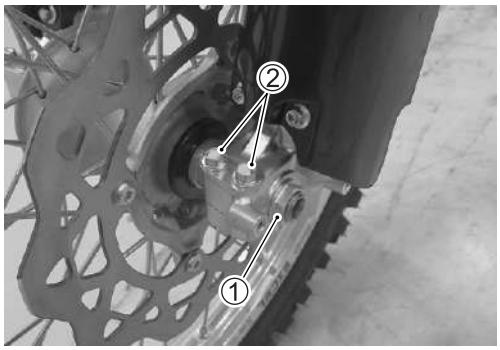

- Place the motorcycle on a block to lift front wheel off the ground.
- Loosen the right axle holder bolts ③.
- Remove the front axle ④.
- Remove the front wheel.

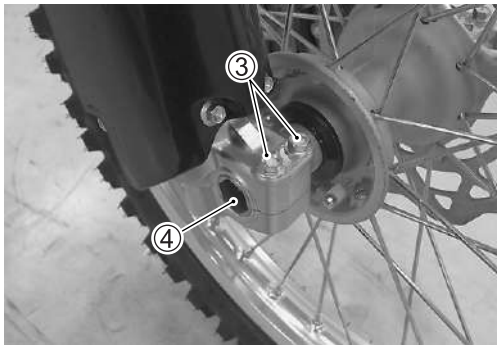

INSPECTION

Wheel Spacer and Dust Seal

- Remove the wheel spacers ① from the front wheel.
- Inspect the wheel spacers ① and dust seals ② for wear and cracks.
- If any defects are found, replace the wheel spacer ① together with the dust seal ②.

NOTE:
Apply grease to the wheel spacers ① and dust seals ② before reassembling.

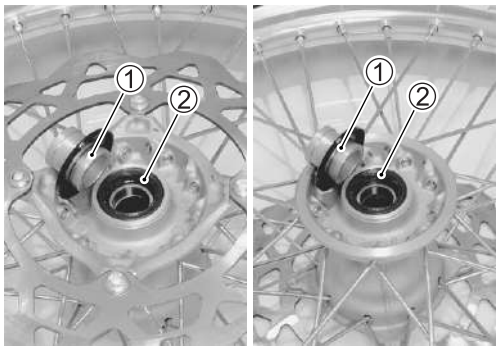

Axle

- Support the axle with the V blocks and measure the axle runout.
- If the runout exceeds the limit, replace the axle with a new one.

NOTE:
Shaft runout is half amount of dial gauge reading.

DATA Axle runout
Service Limit: 0.25 mm (0.010 in)

TOOL 09900-20607: Dial gauge
09900-20701: Dial gauge chuck
09900-21304: V blocks

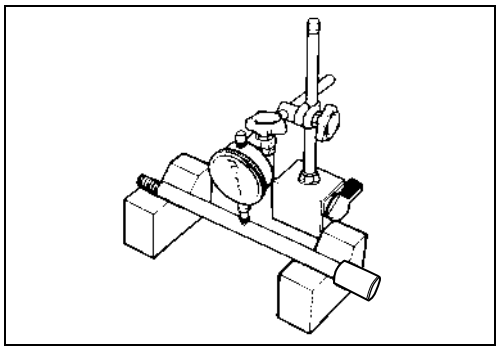

Wheel Rim

- Measure the wheel rim runout with the dial gauge.
- If the runout exceeds the limit, replace the bearings or wheel.

DATA Service Limit: 2.0 mm (0.08 in) ... axial and radial

TOOL 09900-20607: Dial gauge
09900-20701: Dial gauge chuck

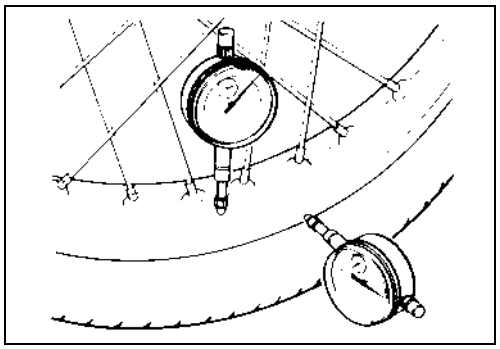

Wheel Bearing

- Turn the inner race by finger and inspect it for smooth movement.
- Inspect for bearing damage.
- If any defects are found, replace the bearing with a new one.

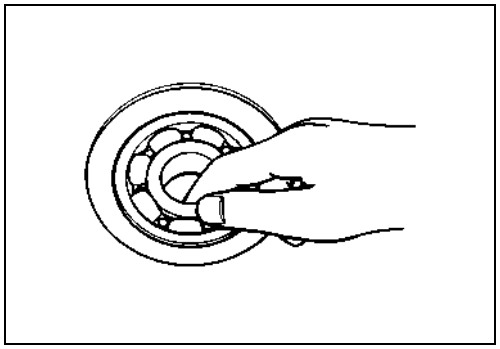

DISK PLATE REPLACEMENT

- Remove the disk plate ② by removing its bolts ①.
- Apply thread lock to the disk plate bolts ①.

99000-32150: THREAD LOCK CEMENT "1322D" or equivalent

- Tighten the disk plate bolts ① to the specified torque.

Disk plate bolt: 11 N·m (1.1 kgf-m, 8.0 lbf-ft)

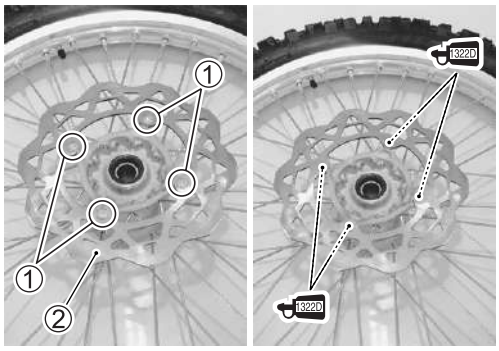

INSTALLATION

- Hold the front axle ① with the special tool and tighten the front axle nut temporarily.

09940-34581: Front fork assembling attachment (F)

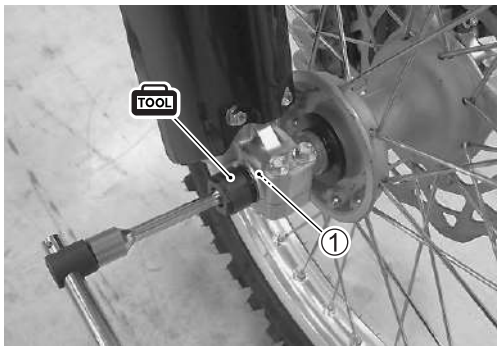

- Remove the block from under the chassis tube and move the front forks up and down several times.
- Tighten the front axle nut ② to the specified torque.

Front axle nut: 35 N·m (3.5 kgf-m, 25.5 lbf-ft)

- Tighten the left and right axle holder bolts ③ to the specified torque.

Front axle holder bolt: 21 N·m (2.1 kgf-m, 15.0 lbf-ft)

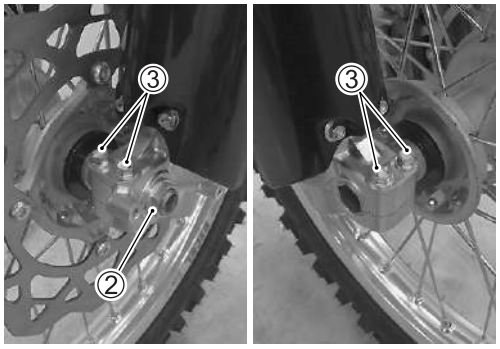

FRONT WHEEL SPOKES REPLACEMENT

(☞5-26)

REAR WHEEL

REMOVAL

- Loosen the rear axle nut ①.
- Place the motorcycle on a block to lift the rear wheel off the ground.
- Remove rear axle nut ① and washer ②.
- Remove the rear axle ③ and chain adjuster washers ④.

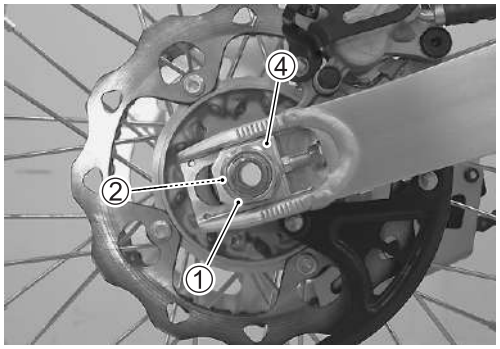

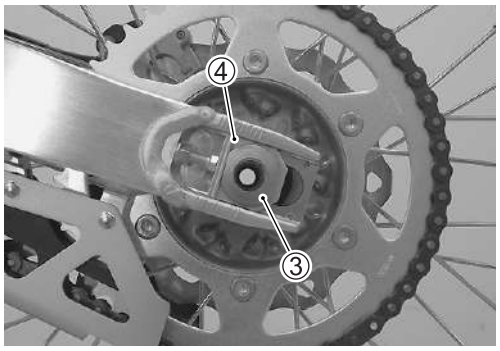

- Disengage the drive chain ⑤.
- Remove the rear wheel ⑥.

INSPECTION

Wheel Spacer and Dust Seal

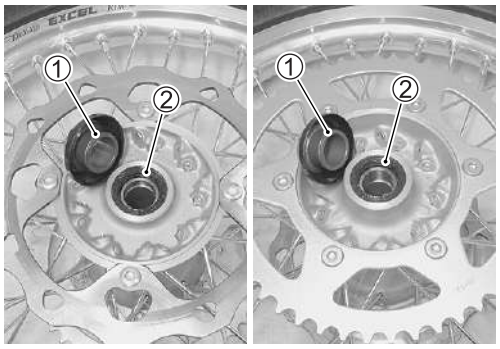

- Remove the wheel spacers ① from the rear wheel.
- Inspect the wheel spacers ① and dust seals ② for wear and cracks.
- If any defects are found, replace the wheel spacer ① together with the dust seal ②.

NOTE:
Apply grease on the wheel spacers ① and dust seals ② before reassembling.

Sprocket

- Inspect the sprocket teeth for wear.
- If they are worn as shown, replace the two sprockets and drive chain as a set.

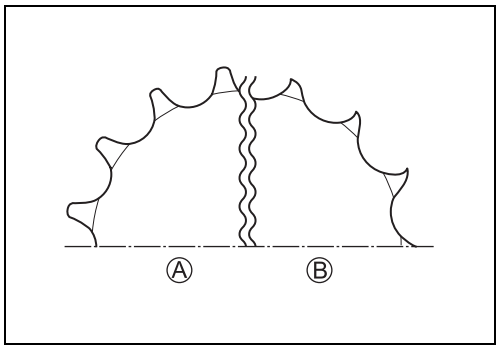

Ⓐ Normal wear
Ⓑ Excessive wear

Axle (☞4-56)

Wheel Rim (☞4-56)

Wheel Bearing (☞4-56)

DISK PLATE REPLACEMENT

- Remove the disk plate ② by removing its bolts ①.
- Apply thread lock to the disk plate bolts ①.

1322D 99000-32150: THREAD LOCK CEMENT "1322D" or equivalent

- Tighten the disk plate bolts ① to the specified torque.

Disk plate bolt: 26 N·m (2.6 kgf-m, 19.0 lbf-ft)

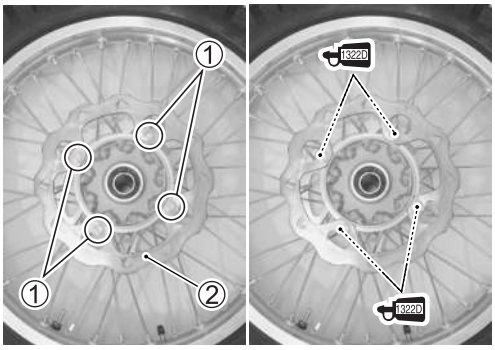

REAR SPROCKET REPLACEMENT

- Remove the rear sprocket ② by removing its bolts ① and nuts.

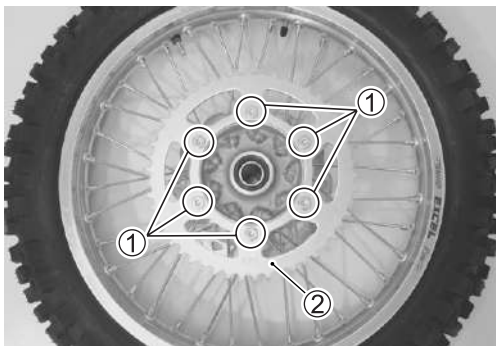

- Install the rear sprocket as the letter on the sprocket surface faces outside.
- Tighten the rear sprocket nuts to the specified torque.

Rear sprocket nut: 30 N·m (3.0 kgf-m, 21.5 lbf-ft)

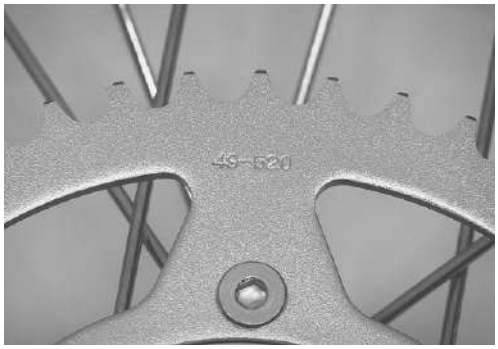

INSTALLATION

- Install the rear wheel, chain adjuster washers ① and rear axle.
- Adjust the drive chain slack. (☞2-37)

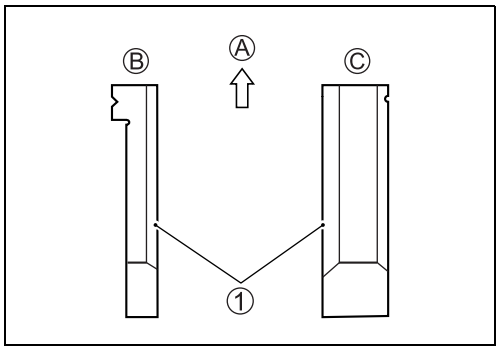

Ⓐ FWD
Ⓑ Left
Ⓒ Right

- Tighten the rear axle nut ② to the specified torque.

Rear axle nut: 100 N·m (10.0 kgf-m, 72.5 lbf-ft)

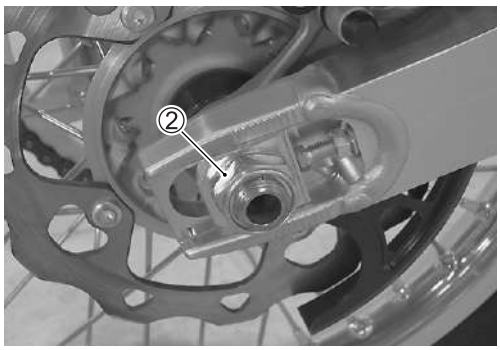

REAR WHEEL SPOKES REPLACEMENT

(☞5-26)

FRONT AND REAR BRAKES

BRAKE FLUID AIR BLEEDING

⚠ WARNING

Brake fluid can be hazardous to humans and pets. Brake fluid is harmful or fatal if swallowed, and harmful if it comes in contact with your skin or eyes.

Keep brake fluid away from children. Call your doctor immediately if brake fluid is swallowed and induce vomiting. Flush eyes or skin with water if brake fluid gets in eyes or comes in contact with skin.

⚠ WARNING

The use of any fluid except DOT 4 brake fluid from a sealed container can damage the brake system and lead to an accident.

Clean reservoir cap before removing. Use only DOT 4 brake fluid from sealed container. Never use or mix different types of brake fluid.

NOTICE

Spilled brake fluid can damage painted surfaces and plastic parts.

Be careful not to spill any fluid when filling the brake fluid reservoir. Wipe spilled fluid up immediately.

- Remove the reservoir cap ② by removing its screws ①.

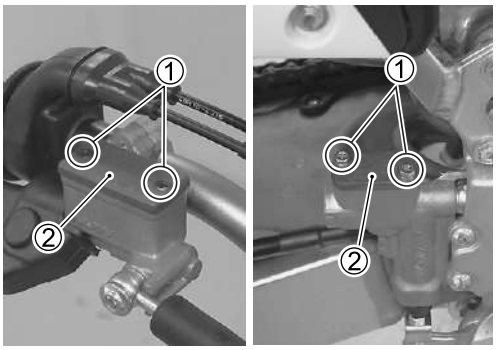

- Pour brake fluid up to the UPPER line Ⓐ.

Specification and classification: DOT 4

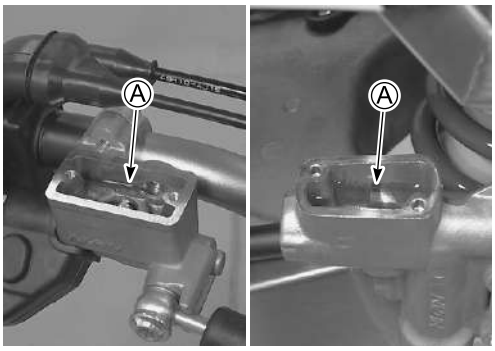

- Connect a transparent tube to the bleeder valve and set the other end into a receptacle.
- Pump the brake lever/pedal until air bubbles stop coming out from the reservoir.
- Hold the brake lever/pedal in the squeezed position.
- Open the bleeder valve and tighten the bleeder valve.
- Release the brake lever/pedal.
- Repeat this sequence until air bubbles stop coming out from the bleeder valve.

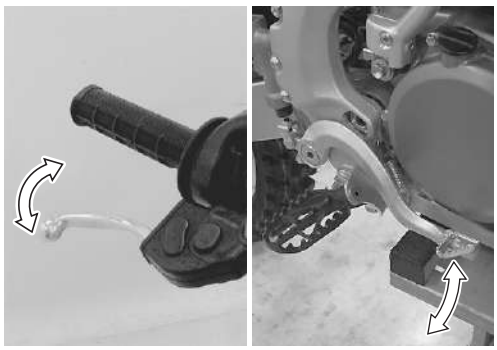

NOTE:

** Do not release the brake lever/pedal while the bleeder valve is opened.*

** Replenish brake fluid to the UPPER line when the brake fluid level drops below LOWER line.*

- Tighten the air bleeder valve.

Brake air bleeder valve: 6 N·m (0.6 kgf-m, 4.5 lbf-ft)

- Pour brake fluid up to the UPPER line.
- Reassemble the reservoir cap.

BRAKE FLUID REPLACEMENT

- Remove the reservoir cap. (☞4-62)
- Suck up the brake fluid as much as possible.
- Drain the old brake fluid as much as possible.
- Fill the reservoir with new brake fluid.

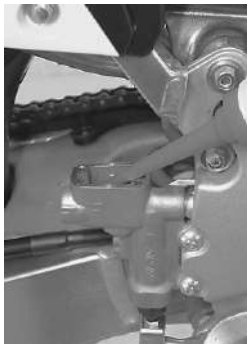

- Connect a transparent tube to the bleeder valve and set the other end into a receptacle.
- Loosen the bleeder valve and pump the brake lever/pedal until old brake fluid is completely out of the brake system.
- Bleed air from the brake system. (☞4-62)

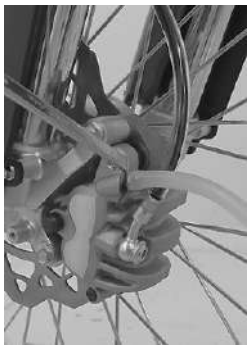

BRAKE PADS REPLACEMENT

FRONT BRAKE PADS

- Remove the cap ① and pad mounting pin ②.

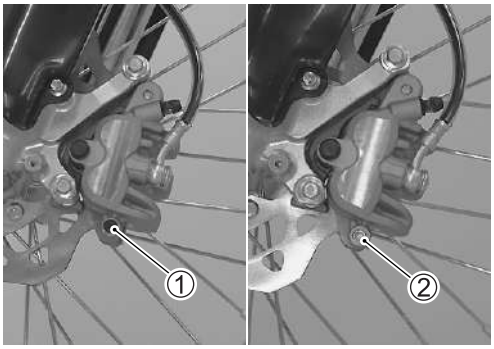

- Remove the brake pads ③.

NOTE:
Replace the two brake pads as a set.

- Fit the new brake pads into the caliper.
- Tighten the pad mounting pin ② to the specified torque and install the cap.

Brake pad mounting pin: 18 N·m (1.8 kgf-m, 13.0 lbf-ft)

NOTE:
Pump the brake lever several times to seat the brake pads after reassembling.

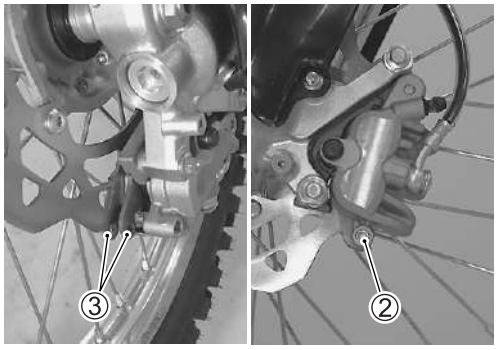

REAR BRAKE PADS

- Remove the pad mounting pin ①.
- Remove the brake pads ②.

NOTE:
Replace the two pads as a set.

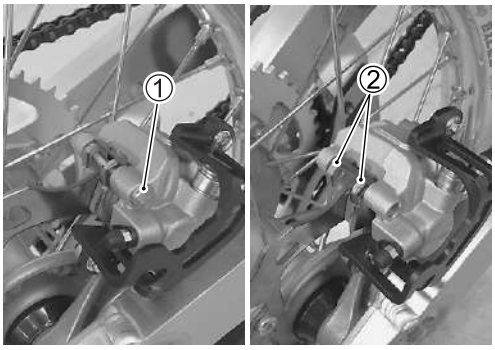

- Fit the new brake pads into the caliper.
- Apply grease to the O-ring.

99000-25100: SUZUKI SILICONE GREASE or equivalent

- Tighten the brake pad mounting pin ① to the specified torque.

Brake pad mounting pin: 18 N·m (1.8 kgf-m, 13.0 lbf-ft)

NOTE:
Pump the brake pedal several times to seat the brake pads after reassembling.

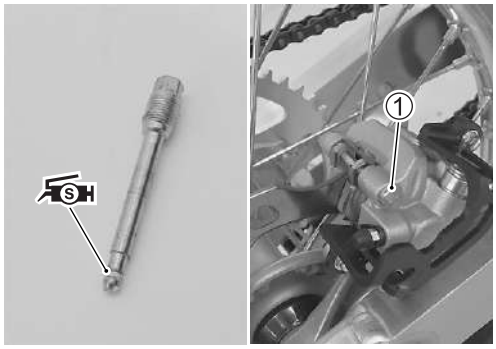

BRAKE CALIPER

⚠ WARNING

The use of any fluid except DOT 4 brake fluid from a sealed container can damage the brake system and lead to an accident.

Clean reservoir cap before removing. Use only DOT 4 brake fluid from sealed container. Never use or mix different types of brake fluid.

⚠ WARNING

Brake fluid can be hazardous to humans and pets. Brake fluid is harmful or fatal if swallowed, and harmful if it comes in contact with your skin or eyes.

Keep brake fluid away from children. Call your doctor immediately if brake fluid is swallowed, and induce vomiting. Flush eyes or skin with water if brake fluid gets in eyes or comes in contact with skin.

NOTICE

Spilled brake fluid can damage painted surfaces and plastic parts.

Be careful not to spill any fluid when filling the brake fluid reservoir. Wipe spilled fluid up immediately.

FRONT BRAKE CALIPER REMOVAL AND DISASSEMBLY

- Place a rag under the brake hose union bolt ① to catch spilled brake fluid.
- Disconnect the brake hose ② by removing the union bolt ①.
- Remove the caliper mounting bolts ③.
- Remove the caliper.

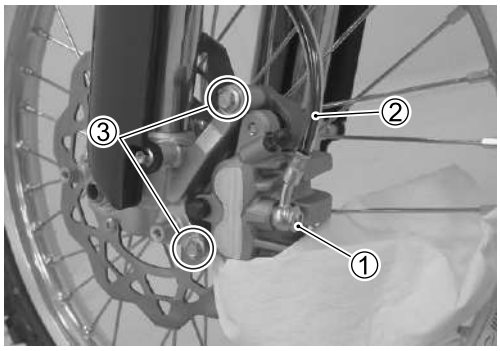

- Remove the brake pads. (☞4-65)
- Remove the spring ④.

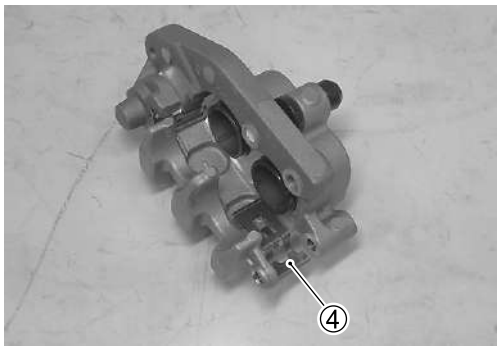

- Remove the caliper bracket ⑤ from the caliper.
- Remove the boots ⑥ and ⑦.
- Remove the spring ⑧.
- Remove the front brake caliper axle bolt (bracket) ⑨.

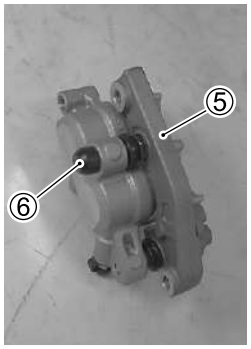

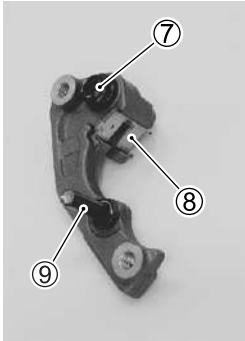

- Wrap the caliper with a rag to prevent brake fluid scatter and piston pop-out.
- Apply low-pressure air into the caliper through the hole to remove the pistons.

⚠ CAUTION

Fingers can get caught between piston and caliper body when removing the piston.

Do not place your fingers on the piston when removing the piston.

- Remove the dust seals ⑩ and piston seals ⑪.
- Remove the front brake caliper axle bolt (caliper) ⑫.

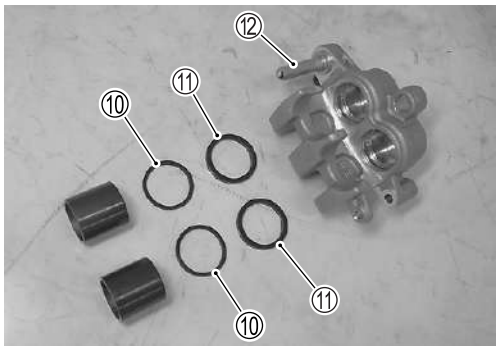

FRONT BRAKE CALIPER REASSEMBLY AND INSTALLATION

Reassemble and install the brake caliper in the reverse order of removal and disassembly. Pay attention to the following points:

- Apply thread lock to the front brake caliper axle bolt (caliper) and tighten it to the specified torque.

1360 99000-32130: THREAD LOCK CEMENT "1360" or equivalent

Front brake caliper axle bolt (caliper): 25 N·m (2.5 kgf-m, 18.0 lbf-ft)

- Apply brake fluid to the new piston seals, new dust seals and pistons.
- Fit the piston seals, dust seals and pistons.

BF Specification and classification: DOT 4

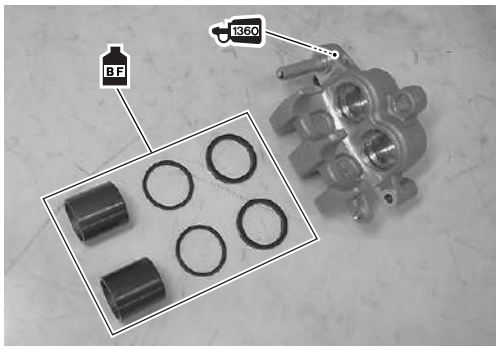

- Apply thread lock to the front brake caliper axle bolt (bracket) and tighten it to the specified torque.

1360 99000-32130: THREAD LOCK CEMENT "1360" or equivalent

Front brake caliper axle bolt (bracket): 28 N·m (2.8 kgf-m, 20.0 lbf-ft)

- Install the springs and boots.
- Apply grease to the caliper axles.

S 99000-25100: SUZUKI SILICONE GREASE or equivalent

- Install the caliper bracket ①.
- Install the brake pads.
- Temporarily tighten the brake pad mounting pin.

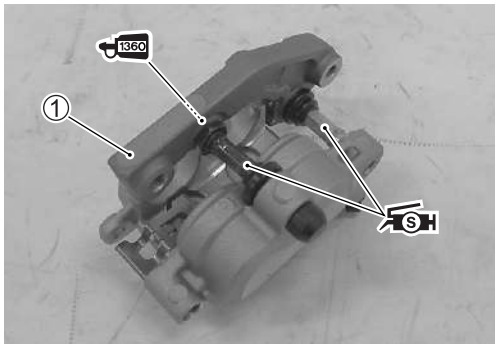

- Tighten the caliper mounting bolts ② to the specified torque.

Front brake caliper mounting bolt:
26 N·m (2.6 kgf-m, 19.0 lbf-ft)

- Tighten the brake pad mounting pin ③ to the specified torque.

Brake pad mounting pin: 18 N·m (1.8 kgf-m, 13.0 lbf-ft)

- After the brake hose union has contacted the stopper Ⓐ, tighten the brake hose union bolt ④ to the specified torque.

NOTE:
Replace the seal washers with new ones.

Brake hose union bolt: 23 N·m (2.3 kgf-m, 16.5 lbf-ft)

- Install the pad mounting pin cap.
- Refill brake fluid and bleed air from the brake system. (☞4-62)

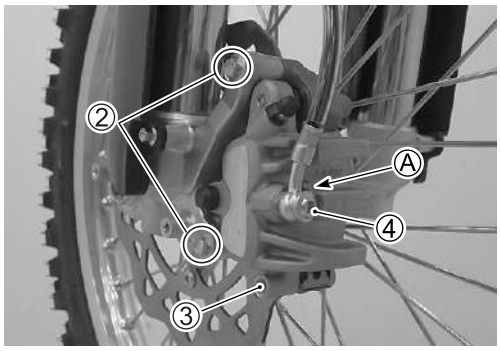

REAR BRAKE CALIPER REMOVAL AND DISASSEMBLY

- Remove the disk cover ② by removing its bolts ①.
- Remove the caliper protector ④ by removing its bolts ③.

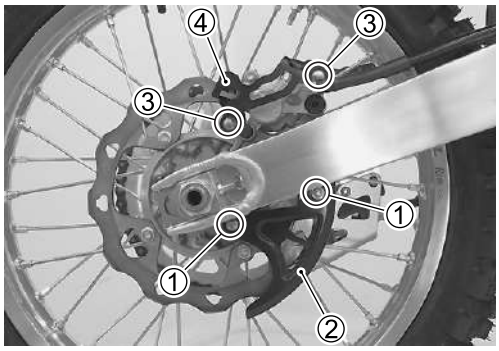

- Place a rag under the brake hose union bolt ⑤ to catch spilled brake fluid.
- Disconnect the brake hose ⑥ by removing the union bolt ⑤.
- Remove the rear wheel. (☞4-58)
- Remove the caliper.

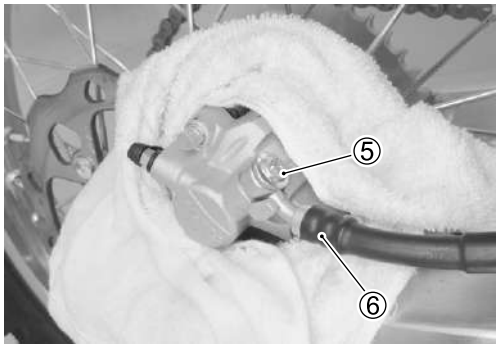

- Remove the brake pad. (☞4-65)
- Remove the spring ⑦.

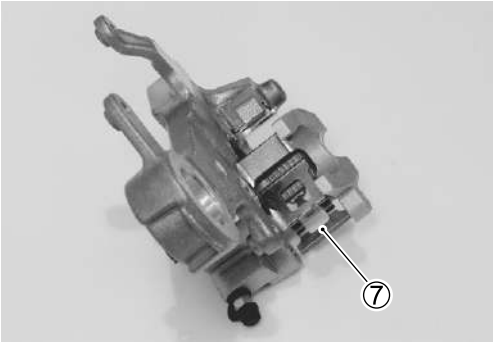

- Remove the caliper bracket ⑧ from the caliper ⑨.
- Remove the boots ⑩ and ⑪.
- Remove the spring ⑫.
- Remove the rear brake caliper axle bolt (bracket) ⑬.

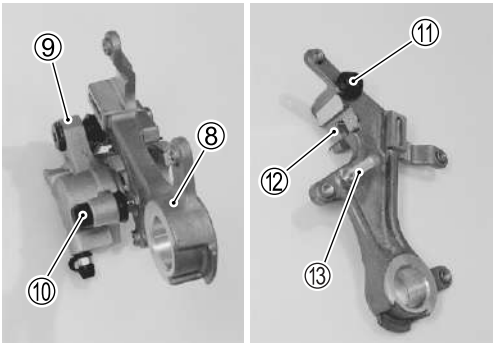

- Wrap the caliper with a rag to prevent brake fluid scatter and piston pop-out.
- Apply low-pressure air into the caliper through the hole to remove the piston.

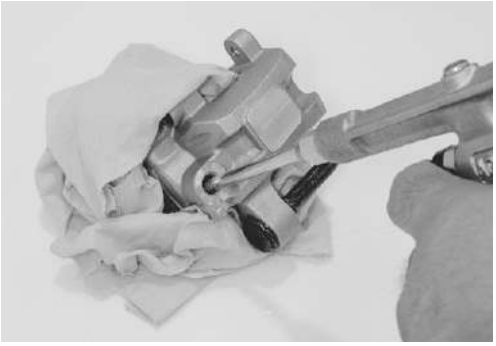

⚠ CAUTION

Fingers can get caught between piston and caliper body when removing the piston.

Do not place your fingers on the piston when removing the piston.

- Remove the dust seal ⑭ and piston seal ⑮.

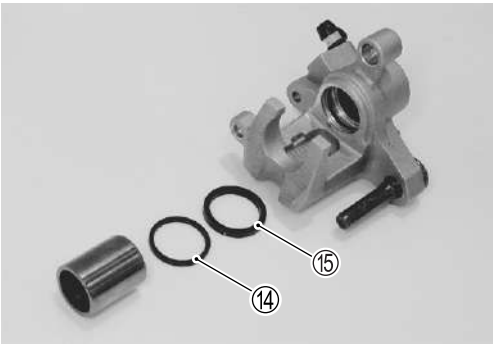

REAR BRAKE CALIPER REASSEMBLY AND INSTALLATION

Reassemble and install the brake caliper in the reverse order of removal and disassembly. Pay attention to the following points:

- Apply brake fluid to the new piston seal, new dust seal and piston.
- Fit the piston seal, dust seal and piston.

Specification and classification: DOT 4

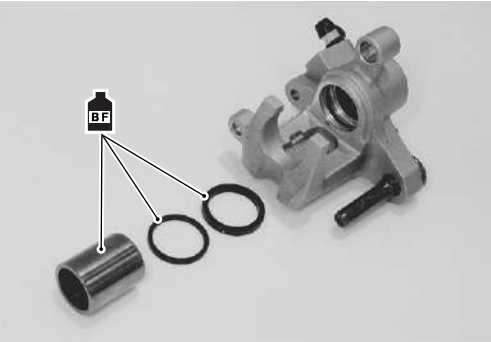

- Apply thread lock to the rear brake caliper axle bolt (bracket) and tighten it to the specified torque.

99000-32130: THREAD LOCK CEMENT "1360" or equivalent

Rear brake caliper axle bolt (bracket): 13 N·m (1.3 kgf-m, 9.5 lbf-ft)

- Install the springs and boots.
- Apply grease to the caliper axles.

99000-25100: SUZUKI SILICONE GREASE or equivalent

- Install the caliper bracket ①.

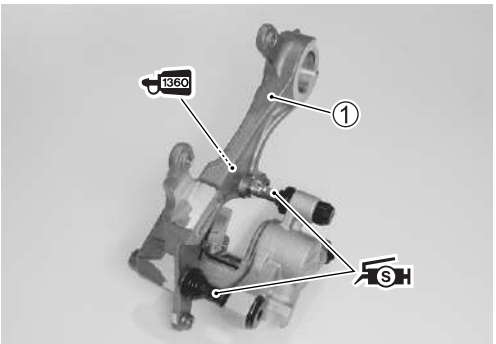

- Install the brake pads.
- Apply grease to the O-ring.

99000-25100: SUZUKI SILICONE GREASE or equivalent

- Temporarily tighten the brake pad mounting pin.

- Install the caliper and rear wheel. (☞4-61)
- Tighten the brake pad mounting pin ② to the specified torque.

Brake pad mounting pin: 18 N·m (1.8 kgf-m, 13.0 lbf-ft)

- Set the brake hose end between the hose stoppers Ⓐ, then tighten the brake hose union bolt ③ to the specified torque.

NOTE:
Replace the seal washers with new ones.

Brake hose union bolt: 23 N·m (2.3 kgf-m, 16.5 lbf-ft)

- Refill brake fluid and bleed air from the brake system. (☞4-62)

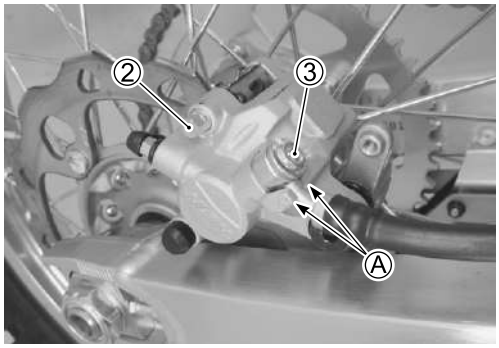

BRAKE PEDAL

REMOVAL

- Remove the clip ①.
- Remove the cotter pin ② and washer ③.

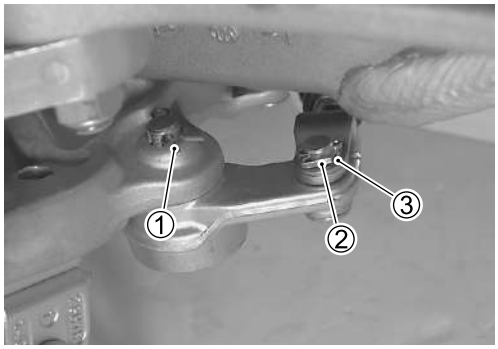

- Remove the master cylinder rod pin ④.
- Remove the brake pedal pivot bolt ⑤ and return spring ⑥.

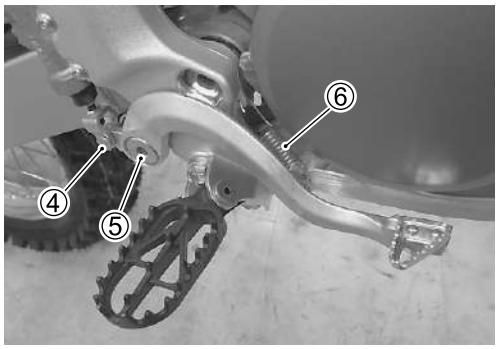

INSTALLATION

- Apply grease to the oil seals and brake pedal pivot bolt.

99000-25011: SUZUKI SUPER GREASE "A" or equivalent

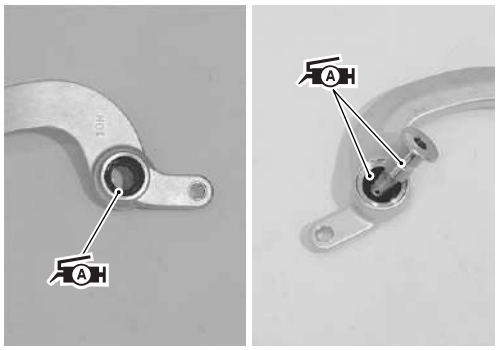

- Install the return spring ① properly. (☞5-20)
- Tighten the brake pedal pivot bolt ② to the specified torque.

Brake pedal pivot bolt: 29 N·m (2.9 kgf-m, 21.0 lbf-ft)

- Install the clip.
- Install the master cylinder rod pin ③, washer and new cotter pin.
- Adjust the brake pedal height. (☞2-43)

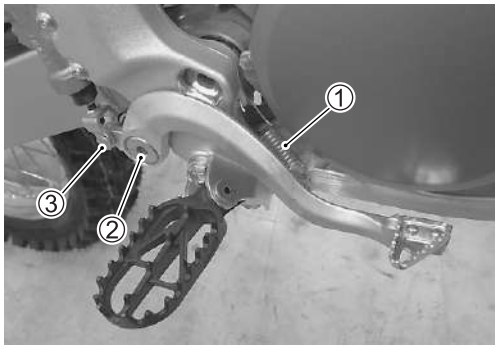

FRONT FORK AND STEERING

FRONT FORK

NOTE:
The left and right front forks are installed symmetrically and therefore the removal/installation and disassembly/reassembly procedures for one side is the same as that for the other side.

REMOVAL

- Place the motorcycle on a block to lift front wheel off the ground.
- Remove the front wheel. (☞4-55)
- Remove the fork protector ② by removing the mounting bolts ①.
- Remove the brake caliper ③. (LH only) (☞4-67)

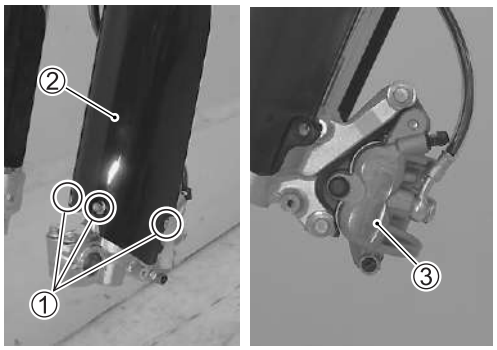

- Loosen the front fork upper clamp bolts ④.
- Hold the fork body and loosen the front fork lower clamp bolts ⑤.
- Remove the front fork ⑥.

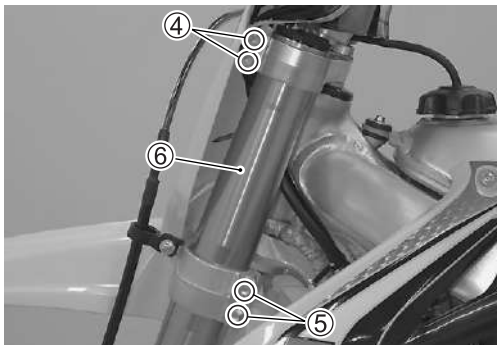

DISASSEMBLY

- Record the damping force settings before disassembling.
- Thoroughly clean the fork before disassembly.

NOTICE
Scratches or other damage on the inner tube or on the oil seal lip will cause oil leakage. **Avoid scratching or damaging the inner tube or the oil seal. Use a mild detergent or car wash soap and sponge out dirt with plenty of water.**

Fork Cap

- Remove the air valve cap ①.
- Check the air pressure setting and record it before releasing air pressure.

- Hold the front fork vertically.
- Release the air pressure gradually by pressing the air valve with a screwdriver.

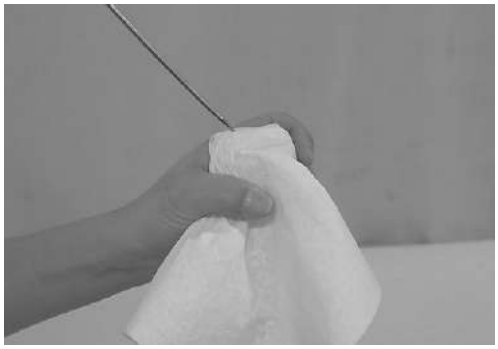

⚠ CAUTION
Oil may jet out from the air valve of the front fork and may stick to your eyes and mouth. **When releasing the air pressure, place a rag over the air valve and use a screwdriver to press the air valve.**

- Clamp the lower clamp mounting part of outer tube ② with a vise. Protect the outer tube ② with a rag when using a vise.

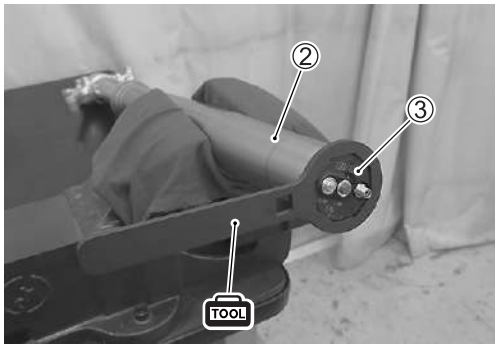

⚠ WARNING
Clamping the outer tube ② too tight can damage it. Outer tube ② damage will affect riding stability. **Do not clamp the outer tube ② too tight.**

- Loosen the fork cap ③ with the special tool.

TOOL 09955-04910: Front fork cap wrench (49 mm)

- Hold the front fork vertically.
- Remove the fork cap ③ from the outer tube ②.
- Hold the lock-nut ④ and remove the fork cap ③ with the special tool.

TOOL 09955-04910: Front fork cap wrench (49 mm)

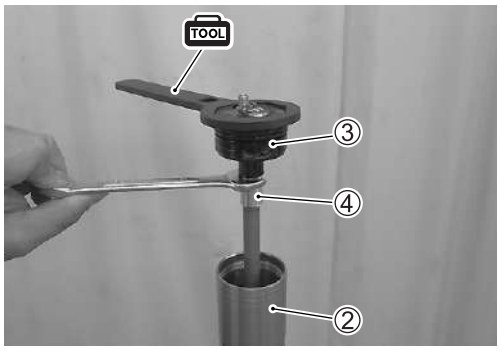

- Place a drain pan under the front fork.
- Drain fork oil by moving the inner tube ⑤ several strokes.

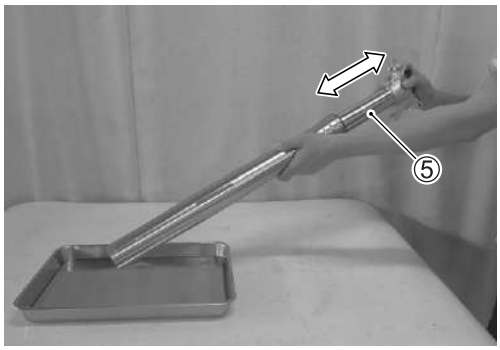

- Remove the air valve ⑥ from the fork cap ③.

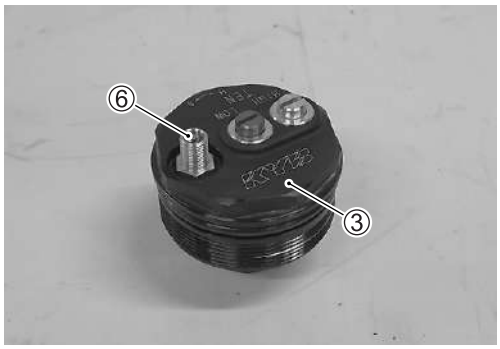

Fork Damper Assembly

- Clamp the axle holder ① with a vise. Protect the axle holder ① with a rag when using a vise.

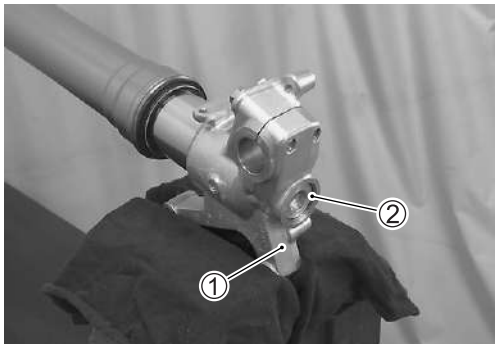

⚠ WARNING

Clamping the axle holder ① too tight can damage it. Axle holder ① damage will affect riding stability.

Do not clamp the axle holder ① too tight.

- Remove the C-ring ②.

- Insert the special tool.

TOOL 09955-04920: Front fork cylinder holder

- Hold the fork damper assembly ③ with the special tool and loosen the center bolt ④ completely with the special tool.

TOOL 09900-18720: Hexagon bit socket (14 mm)

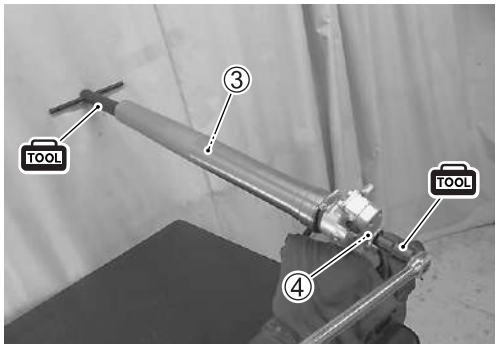

- Remove the center bolt ④ by pushing the fork damper assembly ③ with the special tool.

TOOL 09955-04920: Front fork cylinder holder

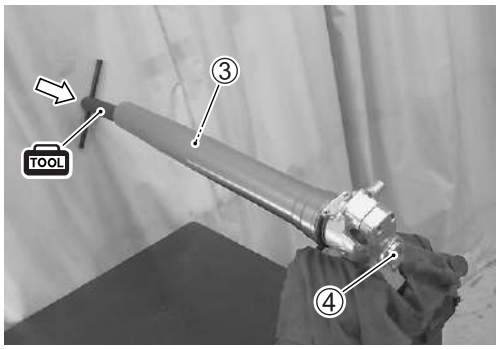

- Remove the fork damper assembly ③.

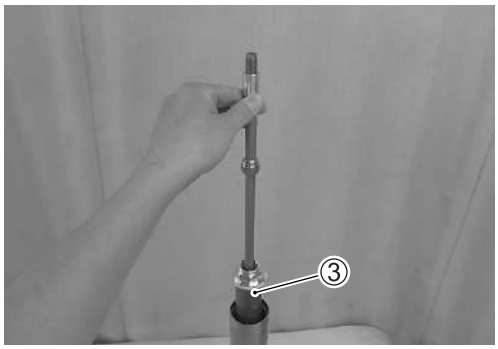

- Stop up the piston rod hole Ⓐ with your thumb.
- Drain fork oil from the fork damper assembly ③ by moving the piston rod ⑤ several strokes.

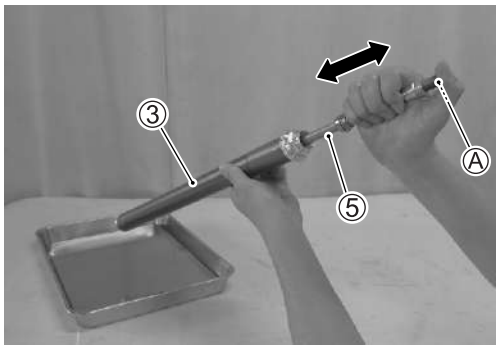

⚠ CAUTION

Oil may jet out from the piston rod hole Ⓐ of the fork damper assembly ③ and may stick to your eyes and mouth.

Stop up the piston rod hole Ⓐ of the fork damper assembly ③ with your thumb.

Inner Tube and Outer Tube

- Remove the dust seal ① and scraper ②.
- Remove the stopper ring ③.

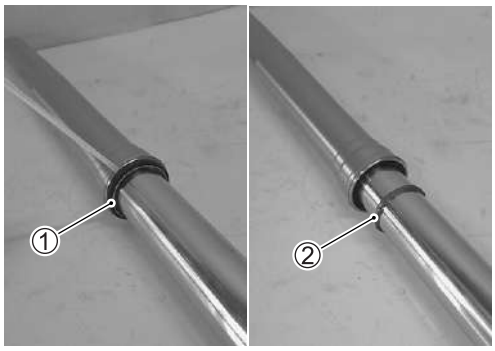

NOTICE

Scratches on the inner tube could cause oil leaks.

Avoid scratching when removing.

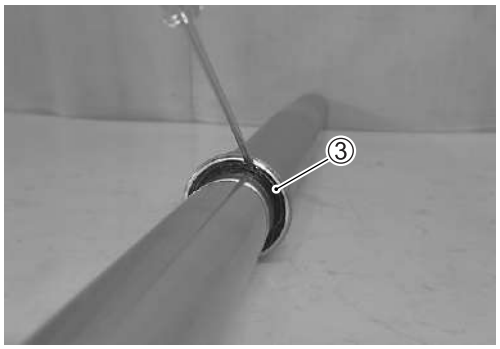

- Separate the inner tube ④ out of the outer tube ⑤.

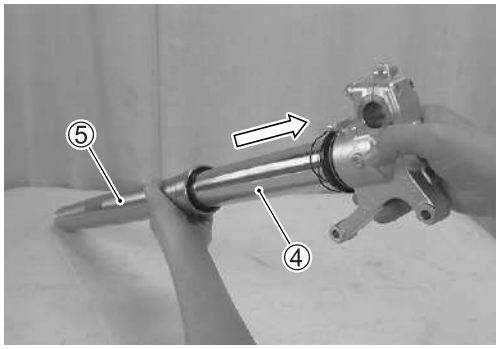

- Remove the slide bushing ⑥ from the inner tube ④.

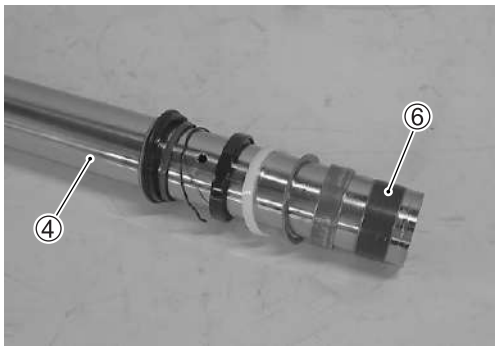

- Remove the following parts from the inner tube ④.
  Guide bushing ⑦
  Seal retainer ⑧
  Collar ⑨
  Oil seal ⑩
  Stopper ring ③
  Scraper ②
  Dust seal ①

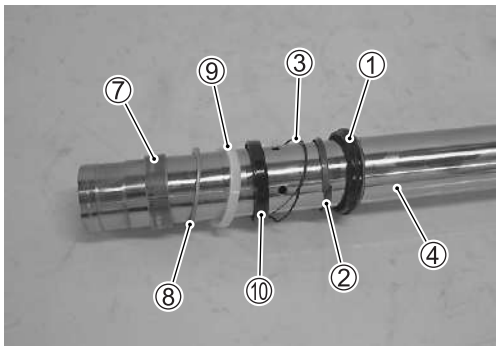

INSPECTION

Center Bolt

- Inspect the center bolt for damage. If it is damaged, replace it with a new one.

Fork Cap

- Inspect the fork cap for damage. If it is damaged, replace it with a new one.

Inner Tube and Outer Tube

- Inspect the inner tube for scratches. If it has scratches, replace it with a new one.
- Inspect the outer tube for dent. If it is dented all the way to the inner side, replace it with a new one.

- Measure the inner tube runout using the V blocks and dial gauge.

NOTE:
Inner tube runout is half amount of dial gauge reading.

DATA Inner tube runout
Service Limit: 0.4 mm (0.02 in)

TOOL 09900-20607: Dial gauge
09900-20701: Dial gauge chuck
09900-21304: V blocks

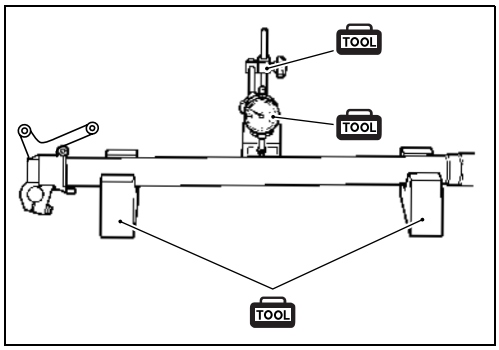

Fork Damper Assembly

- Inspect the fork damper assembly for scratches or bending. If it has scratches or is bent, replace it with a new one.

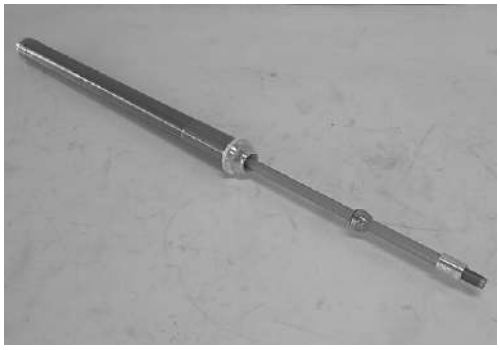

Slide Bushing and Guide Bushing

- Inspect the teflon coating metals (slide bushing and guide bushing) for wear or damage. If they are worn or damaged, replace them with new ones.
- Inspect the teflon coating metals surface. If they are not clean, clean them with a nylon brush and fork oil.

Seal Retainer, Collar and Scraper

- Inspect the seal retainer, collar and scraper for damage. If it is damaged, replace it with a new one.

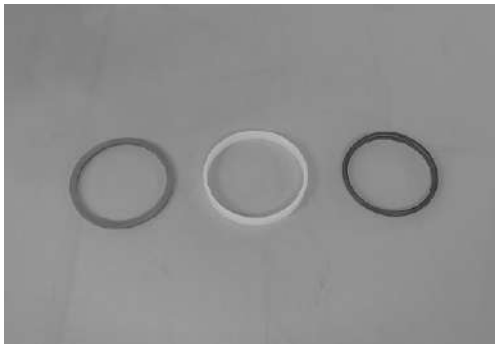

FORK CAP TIGHTENING TORQUE

Measure the effective length L of the torque wrench.
Calculate the reading torque on the torque wrench by use of the formula shown below.

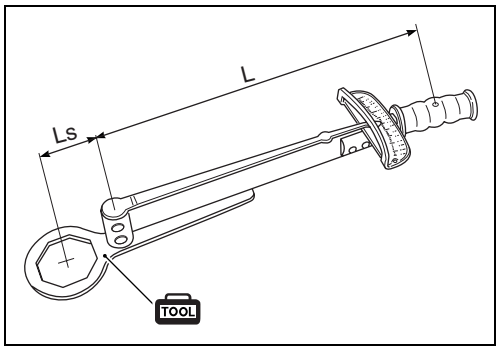

$$T = \frac{L \times Ts}{L + Ls}$$

T: Reading torque on the torque wrench
Ts: Specified torque
Ls: 50 mm (2.0 in)
L: Effective length of the torque wrench

TOOL 09955-04910: Front fork cap wrench (49 mm)

REASSEMBLY

NOTICE

When assembling the O-rings, oil seal, dust seal, bushings and other sliding parts, if an oil other than the specified fork oil is coated, it can lead to oil leakage or operation failure.

Always use the specified fork oil.

NOTE:
** Clean all fork parts before reassembling.*
** Wipe off fork oil from the fork parts before reassembling.*
** Replace the O-rings, gasket, oil seal and dust seal with new ones.*

Inner Tube and Outer Tube

- Apply fork oil to the lip of new oil seal ① and new dust seal ②.
- Cover the inner tube ③ with a plastic film.
- Install the following parts to the inner tube ③:
  Dust seal ②
  Scraper ④
  Stopper ring ⑤
  Oil seal ①

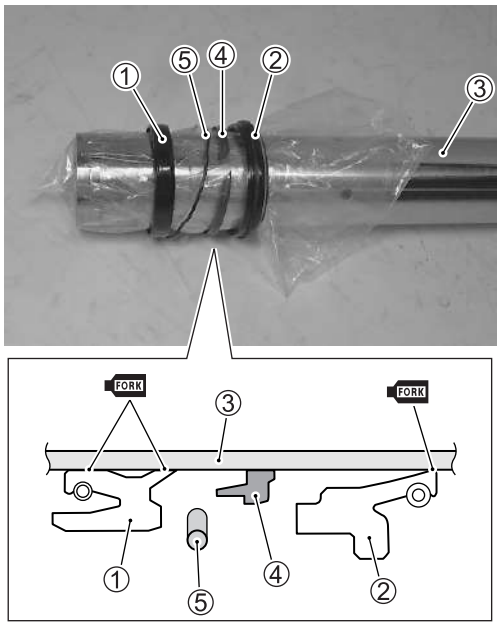

⚠ WARNING

Attach the indicating face of the oil seal ① to the stopper ring side. If the oil seal ① is attached reversely, oil leak may occur when the front fork is stroked; oil adhering to the front brake, the brake may loose its effectiveness and, in the end, all this may lead to an accident.

Attach securely the indicating face of the oil seal ① to the stopper ring side.

NOTICE

Installing the oil seal ① and dust seal ② improperly can cause damage to the seal lip.

In installation, cover the inner tube ③ with a protective vinyl film and fit the oil seal ① and dust seal ② over the film.

- Remove the plastic film and then install the collar ⑥, seal retainer ⑦, guide bushing ⑧ and slide bushing ⑨.
- Clean the parts and keep them free from dust.
- Apply fork oil to the bushings.

NOTE:
Inspect the bushings for burrs. If there is a burr, remove it with a knife, taking care not to peel off the teflon coating. If the bushings have a large crack or excessive play after installing them, replace them with new ones.

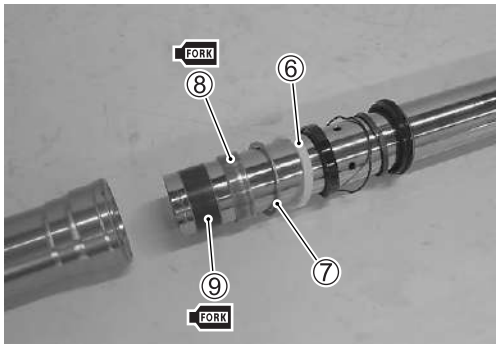

- Insert the inner tube into the outer tube.
- Install the guide bushing ⑧ and seal retainer ⑦ with the special tool.

TOOL 09940-52861: Front fork oil seal installer set

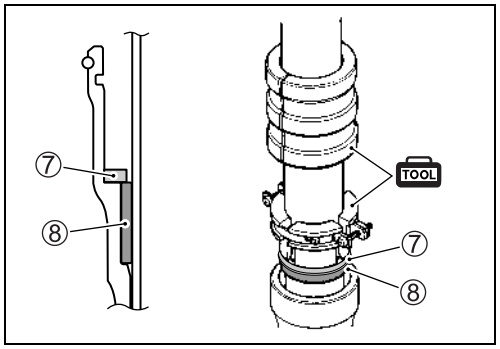

- Set the collar ⑥.
- Install the oil seal ① with the special tool until the stopper ring groove of the outer tube can be seen.

TOOL 09940-52861: Front fork oil seal installer set

- Attach the stopper ring ⑤ securely to the stopper ring groove of the outer tube.

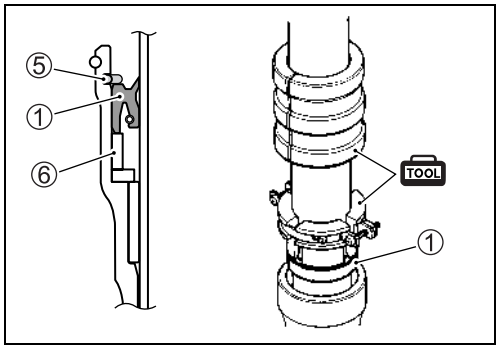

- Set the scraper ④ and install the dust seal ②.

NOTE:
After installing the dust seal ②, make sure that there are no cracks around the circumference of the seal. Cracks could allow water, mud and the like to enter and cause an oil leak.

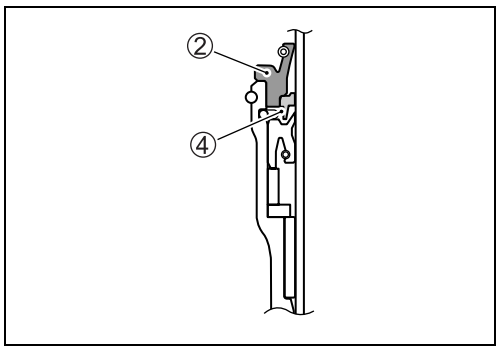

Fork Damper Assembly and Fork Cap

- Install the new gasket ①.
- Apply fork oil to the new O-ring ②.

NOTE:
Replace the gasket ① and O-ring ② with new ones.

- Apply thread lock to the center bolt ③.

1322D 99000-32150: THREAD LOCK CEMENT "1322D" or equivalent

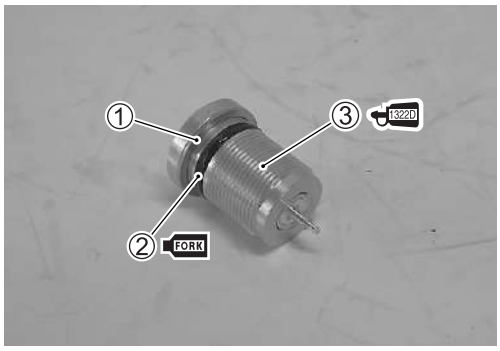

- Clamp the axle holder ④ with a vise. Protect the axle holder ④ with a rag when using a vise.

⚠ WARNING

Clamping the axle holder ④ too tight can damage it. Axle holder ④ damage will affect riding stability.

Do not clamp the axle holder ④ too tight.

- Insert the fork damper assembly ⑤.
- Hold the fork damper assembly ⑤ with the special tool and tighten the center bolt ③ to the specified torque with the special tool.

Center bolt: 75 N·m (7.5 kgf-m, 54.0 lbf-ft)

TOOL 09900-18720: Hexagon bit socket (14 mm)

TOOL 09955-04920: Front fork cylinder holder

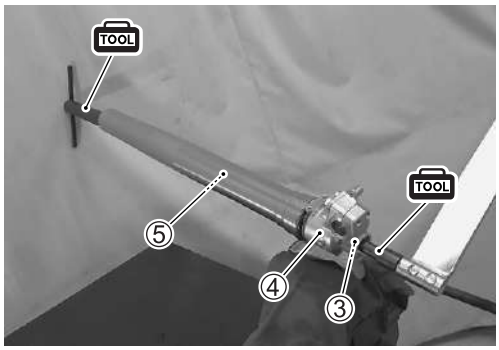

- Install the C-ring ⑥.

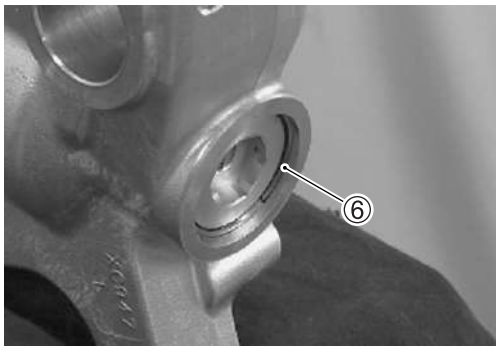

- Hold the front fork vertically.
- Slowly slide down the outer tube ⑦ to fully compressed position.
- Pour fork oil up to the top level Ⓐ of the inner tube.

FORK KYB SUSPENSION OIL KHL15-11 or equivalent

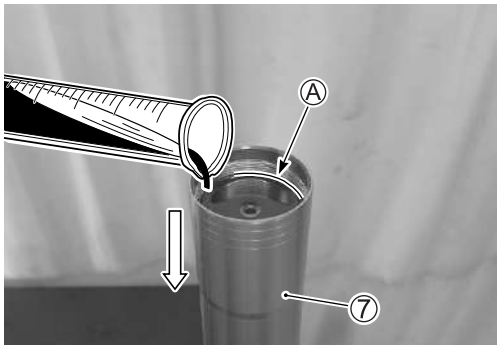

- Apply fork oil to the new O-rings (⑧, ⑨).

NOTE:
Replace the new O-rings (⑧, ⑨) with new ones.

- Tighten the air valve ⑩ to the specified torque.

Air valve: 5.5 N·m (0.55 kgf-m, 4.0 lbf-ft)

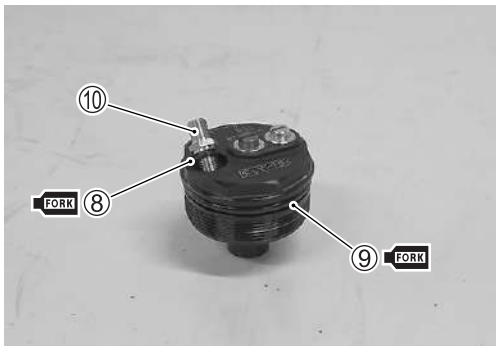

- Raise the piston rod ⑪.
- Tighten the lock-nut ⑫ by hand completely.
- Tighten the fork cap ⑬ by hand completely.

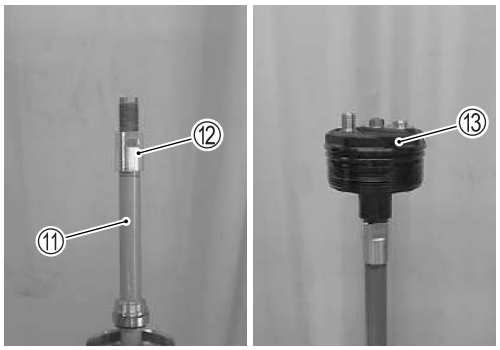

- Turn the lock-nut ⑫ counterclockwise until it contacts with the fork cap ⑬.
- With the lock-nut ⑫ held immovable, temporarily tighten the lock-nut/fork cap with the special tool.

TOOL 09955-04910: Front fork cap wrench (49 mm)

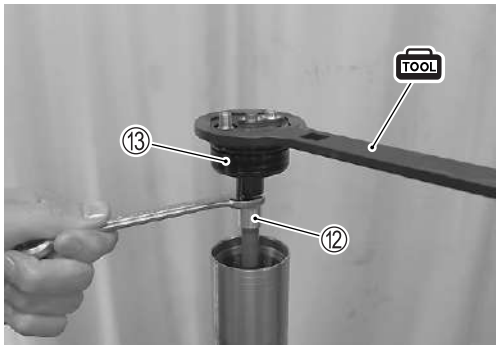

- With the fork cap ⑬ held in raised position, raise the outer tube ⑦ and temporarily tighten the fork cap ⑬ with the special tool.

TOOL 09955-04910: Front fork cap wrench (49 mm)

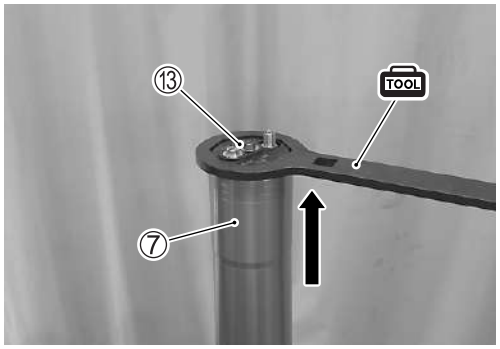

- Protect the axle holder ④ with a rag.
- With the front fork held in vertical position, move the outer tube ⑦ several strokes, and feed oil into the fork damper.

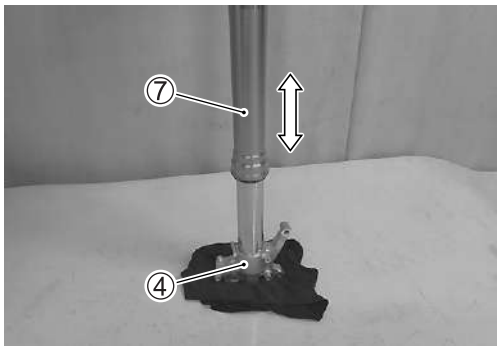

- Remove the fork cap ⑬ from the outer tube ⑦ with the special tool.

TOOL 09955-04910: Front fork cap wrench (49 mm)

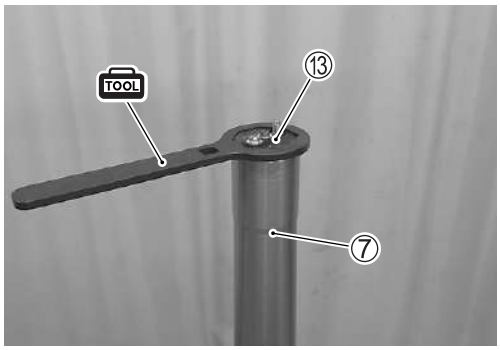

- Hold the front fork vertically and slowly slide down the outer tube ⑦ to fully compressed position.
- Raise the fork cap ⑬ and pour fork oil up to the top level Ⓐ of the inner tube.

FORK KYB SUSPENSION OIL KHL15-11 or equivalent

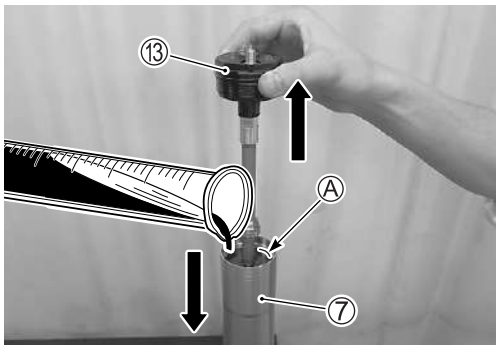

- Stop up the fork cap hole Ⓑ with finger.
- With the front fork held in vertical position, move the piston rod ⑪ several strokes, and bleed air from inside of the fork damper.

⚠ CAUTION
Oil may jet out from the fork cap hole Ⓑ and may stick to your eyes and mouth. **Stop up the fork cap hole Ⓑ with finger.**

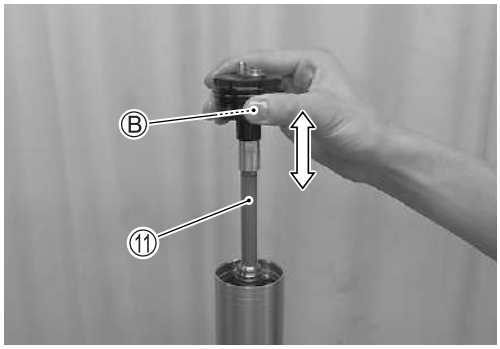

- Hold the front fork vertically.
- Raise the fork cap ⑬ and pour fork oil up to the top level Ⓒ of the outer tube ⑦.

NOTE:
When pouring fork oil, compress the outer tube ⑦ fully.

FORK KYB SUSPENSION OIL KHL15-11 or equivalent

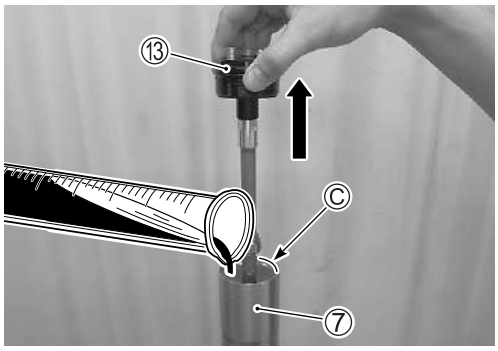

- With the fork cap ⑬ held in raised position, slowly move the outer tube ⑦ several strokes and bleed air between the inner tube and the outer tube.
- Slowly slide down the outer tube ⑦.

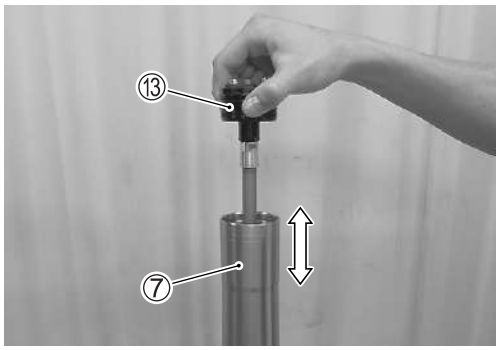

- Hold the lock-nut ⑫ and remove the fork cap ⑬ with the special tool.
- Slowly slide down the piston rod ⑪.

NOTICE
If you pump the piston rod ⑪ after removing the fork cap ⑬, air may be sucked in from the tip of the piston rod. You will run the risk of lowering the performance of suspension. **Do not pump the piston rod ⑪.**

TOOL 09955-04910: Front fork cap wrench (49 mm)

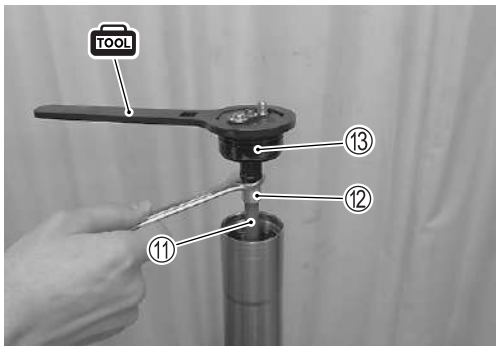

- Hold the front fork vertically and adjust fork oil level ⓐ with the oil level gauge. (☞3-12)

NOTE:
When adjusting the fork oil level ⓐ, compress the outer tube and piston rod fully.

DATA Front fork oil level
Standard setting: 115 mm (4.5 in)

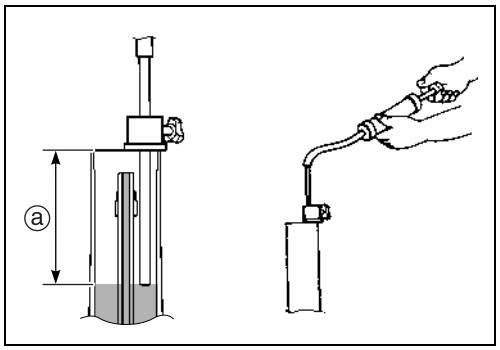

- Raise the piston rod ⑪.
- Tighten the lock-nut ⑫ by hand completely.

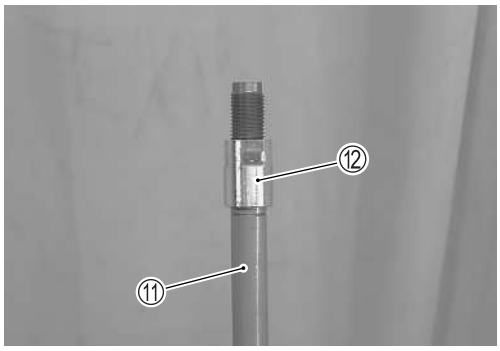

- Slowly tighten the fork cap ⑬ completely and check the clearance ⓑ between the lock-nut end and fork cap end.

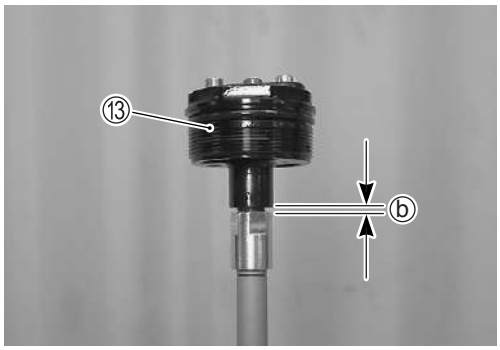

- Turn the lock-nut ⑫ counterclockwise until it contacts with the fork cap ⑬.
- With the lock-nut ⑫ held immovable, tighten the lock-nut/fork cap to the specified torque with the special tool. (☞4-80)

Lock-nut/fork cap: 29 N·m (2.9 kgf-m, 21.0 lbf-ft)

TOOL 09955-04910: Front fork cap wrench (49 mm)

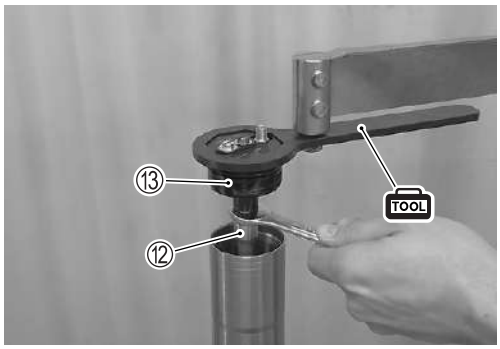

- Temporarily tighten the fork cap ⑬ with the special tool.

TOOL 09955-04910: Front fork cap wrench (49 mm)

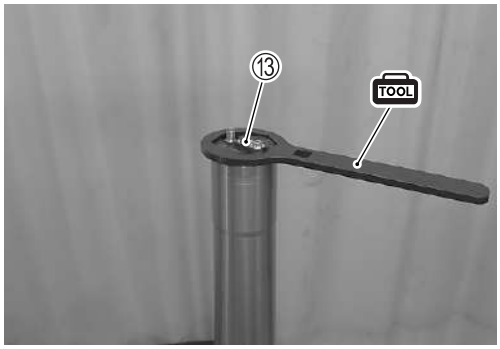

- Clamp the lower clamp mounting part of outer tube ⑦ with a vise. Protect the outer tube ⑦ with a rag when using a vise.

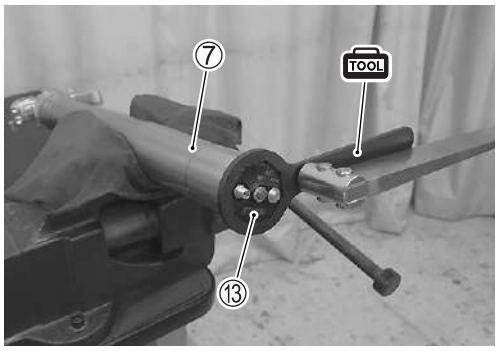

⚠ WARNING

Clamping the outer tube ⑦ too tight can damage it. Outer tube ⑦ damage will affect riding stability.

Do not clamp the outer tube ⑦ too tight.

- Tighten the fork cap ⑬ to the specified torque with the special tool. (☞4-80)

TOOL 09955-04910: Front fork cap wrench (49 mm)

Fork cap: 45 N·m (4.5 kgf-m, 32.5 lbf-ft)

- Hold the front fork vertically.
- Connect a hand-operated air pump to the air valve ⑩. (☞3-7)
- Adjust the air pressure to the specified value or recorded setting.

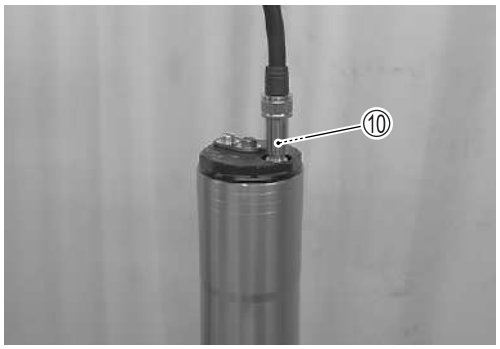

NOTICE

Sudden pressurization can damage the fork parts.

Do not apply sudden pressurization.

NOTE:

** The specified air pressure is the value when the front fork is fully extended.*

** When adjusting the air pressure, do not apply the load.*

DATA Air pressure

Standard setting: 240 kPa (2.4 kgf/cm², 34.1 psi)

- Install the air valve cap ⑭ by hand.

INSTALLATION

- Install the front fork with the upper surface Ⓣ of the outer tube positioned 5.0 mm (0.20 in) ⓐ from the upper surface of the upper bracket.
- Check that the air valve ① is positioned at the front side within 90° ⓑ.

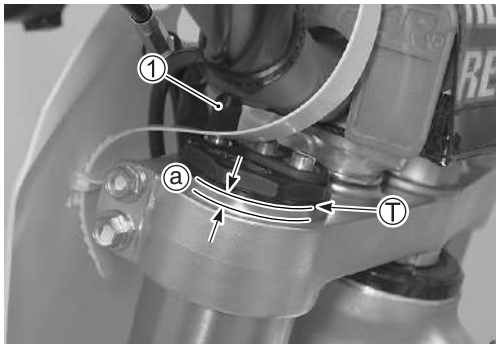

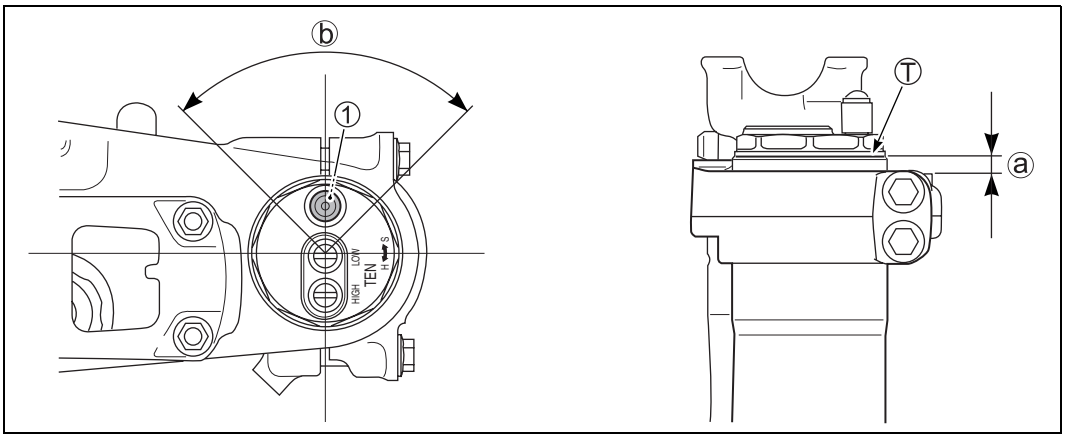

- Tighten the front fork lower clamp bolts ② to the specified torque.

Front fork lower clamp bolt: 23 N·m (2.3 kgf-m, 16.5 lbf-ft)

- Tighten the front fork upper clamp bolts ③ to the specified torque.

Front fork upper clamp bolt: 23 N·m (2.3 kgf-m, 16.5 lbf-ft)

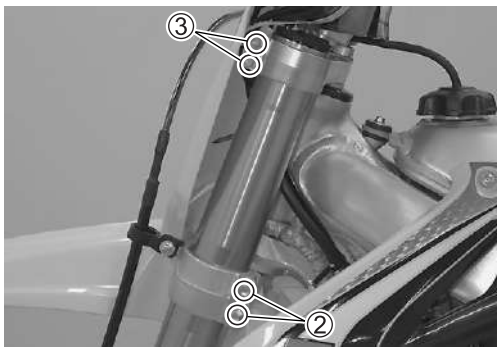

- Install the front wheel. (☞4-57)
- Install the brake caliper. (LH only) (☞4-68)

- Tighten the fork protector bolts ④ to the specified torque.

Fork protector bolt: 4.9 N·m (0.49 kgf-m, 3.5 lbf-ft)

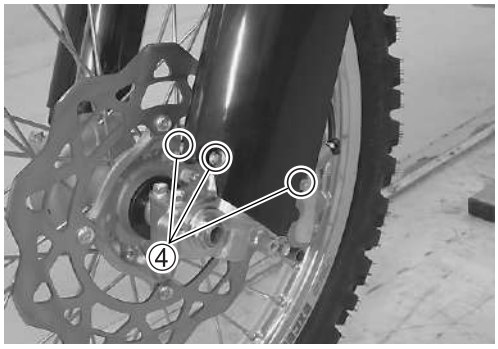

INSPECTION AFTER INSTALLATION

- Front fork (☞2-44)
- Wiring harness and hose routing (☞5-21)

STEERING

REMOVAL

Handlebars

- Place the motorcycle on a block to lift front wheel off the ground.
- Remove the front number plate ② by removing its bolt ①.
- Remove the handlebar pad ③.

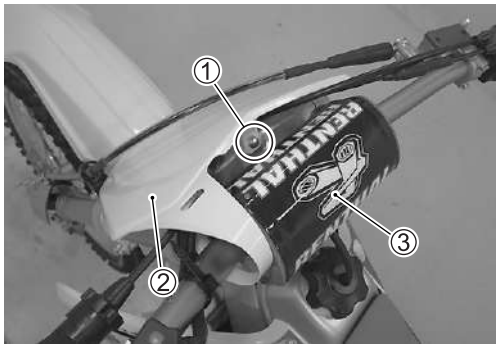

- Remove the clamps ④.
- Remove the engine stop switch ⑥ by removing its screw ⑤.
- Remove the S-HAC switch ⑧ by removing its screw ⑦.

NOTE:
Mark the paint mark Ⓐ on the handlebars between the S-HAC switch clamps before removing.

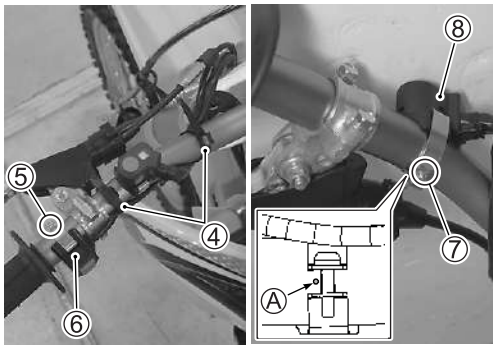

- Remove the clutch lever holder ⑩ removing its bolts ⑨.

NOTE:
Mark the paint marks Ⓑ to the matching surfaces of clutch lever holder and handlebars, left grip and handlebars.

- Remove the left grip ⑪.

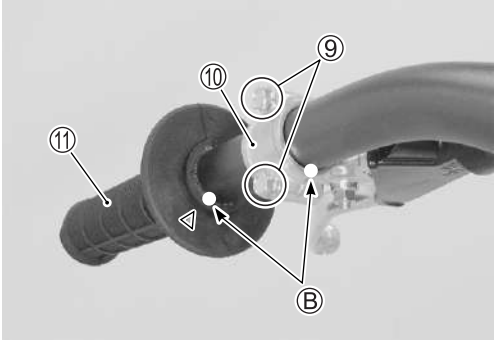

- Remove the front brake master cylinder holder bolts ⑫.

NOTE:
** Mark the paint mark Ⓒ to the matching surface of master cylinder and handlebars before removing.*
** Do not turn the front brake master cylinder upside down.*

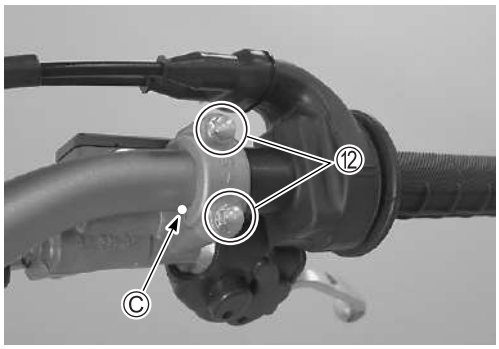

- Remove the throttle case screws ⑬.

NOTE:
Mark the paint mark Ⓓ to the matching surface of throttle case and handlebars before removing.

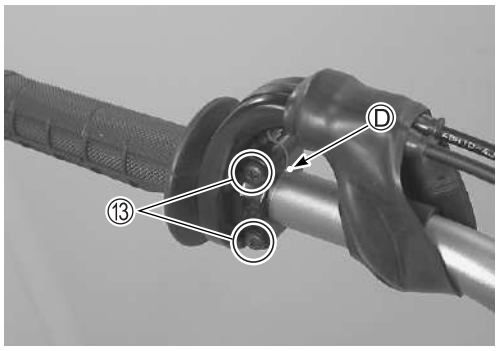

- Slightly loosen the handlebar holder set nuts ⑭.

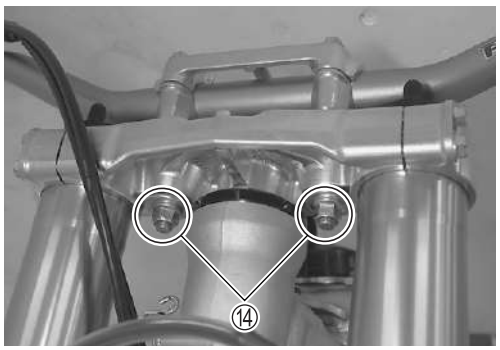

- Remove the handlebars ⑯ by removing the handlebar clamp bolts ⑮.

NOTE:
Mark the paint mark Ⓔ to the matching surface of handlebar holder and handlebars before removing.

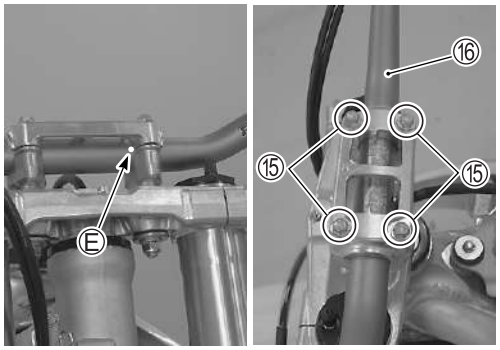

Steering Stem

- Remove the front wheel ①. (☞4-55)
- Remove the brake hose guide bolt ②.
- Remove the front forks ③. (☞4-73)

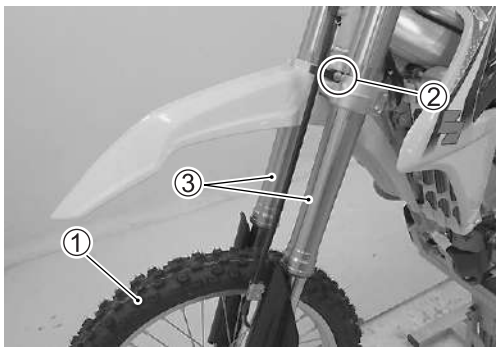

- Remove the front fender ⑤ by removing its bolts ④.

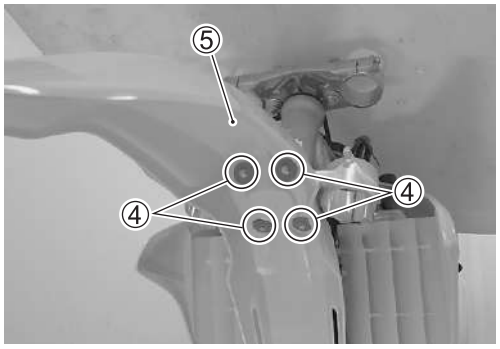

- Remove the steering stem head nut ⑥ and washer ⑦.
- Remove the steering stem upper bracket ⑧.

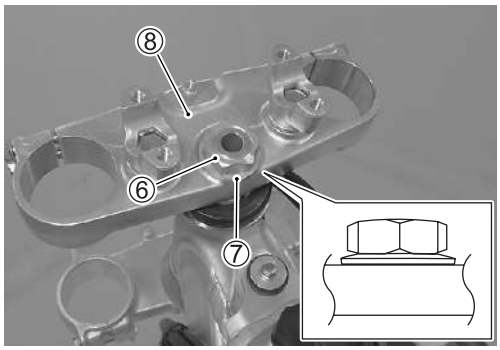

- Remove the handlebar holder set bolts and nuts ⑨.

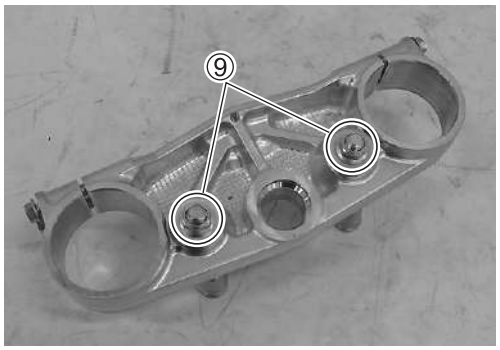

- Remove the handlebar holders, damper bushings and spacers.

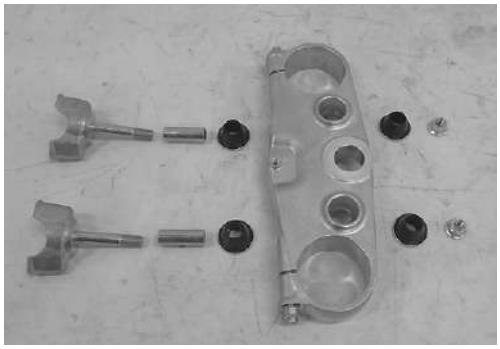

- Remove the steering stem nut ⑩ and steering upper cover ⑪ with the special tools.

NOTE:
Hold the steering stem lower bracket to prevent it from falling.

TOOL 09940-14911: Steering stem nut socket
09940-14960: Steering stem nut socket wrench

- Remove the steering stem lower bracket ⑫ and lower bearing.

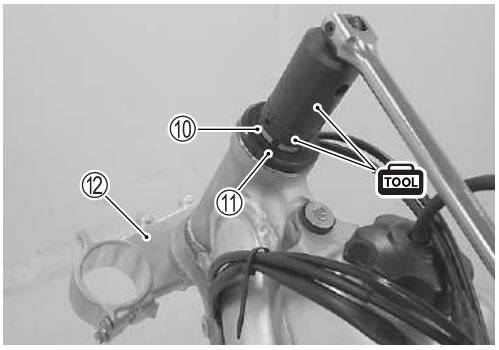

- Remove the upper bearing ⑬.

INSPECTION

- Inspect the removed parts for the following abnormalities.
  - Distortion of the steering stem
  - Bearing wear or damage
  - Abnormal bearing noise
  - Race wear or damage
  - Damper bushing wear or damage
- If any abnormal points are found, replace defective parts with new ones.

INSTALLATION

Install the steering in the reverse order of steering removal.

Pay attention to the following points:

Steering Stem

- Apply grease to the bearings.

99000-25011: SUZUKI SUPER GREASE "A" or equivalent

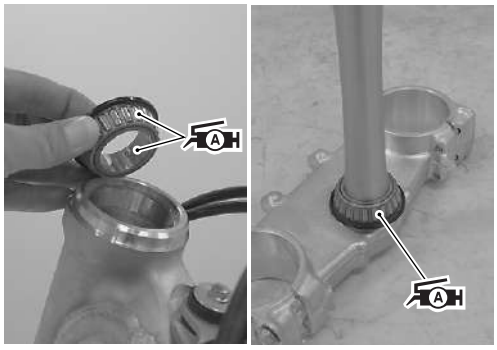

- Fit the steering stem lower bracket, upper bearing, steering upper cover and steering stem nut ①.
- Tighten the steering stem nut ① with the special tools. [45 N·m (4.5 kgf-m, 32.5 lbf-ft)]

09940-14911: Steering stem nut socket
09940-14960: Steering stem nut socket wrench

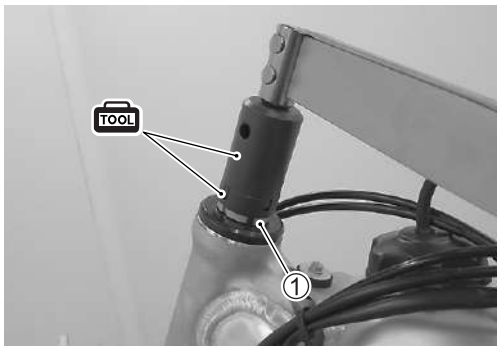

- Move the steering stem right and left several times to seat the bearings.
- Loosen the steering stem nut 1/4 – 1/2 turn.

Steering stem nut: 45 N·m (4.5 kgf-m, 32.5 lbf-ft) then turn counterclockwise 1/4 – 1/2

ⓐ 1/4 – 1/2 turn counterclockwise

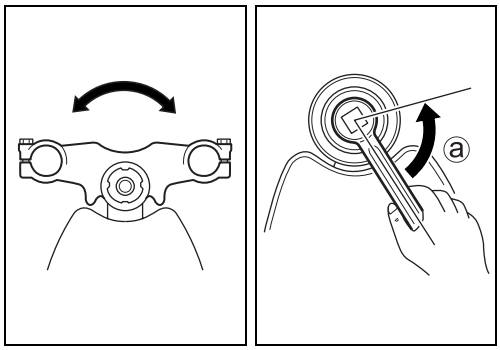

- Install the damper bushings, spacers and handlebar holders.

NOTE:

Make sure that the punch mark Ⓐ on the handlebar holder faces backward.

- Temporarily tighten the handlebar holder set nuts.

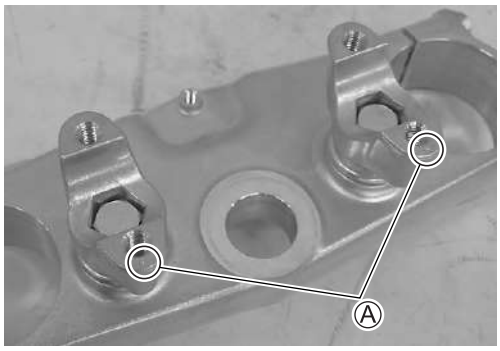

- Fit the steering stem upper bracket ② and washer ③
- Temporarily tighten the steering stem head nut ④.

NOTE:
Pay attention to the direction of the washer ③.

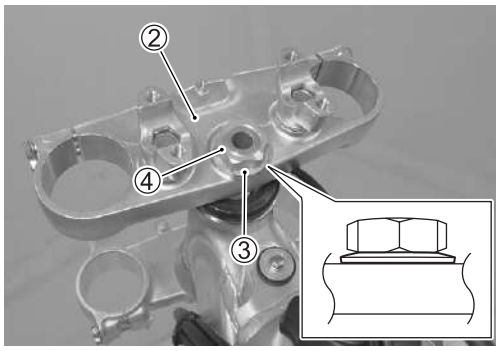

- Temporarily install the front forks to the steering stem, and tighten the lower clamp bolts.
- Tighten the steering stem head nut ⑤ to the specified torque.

Steering stem head nut: 120 N·m (12.0 kgf-m, 87.0 lbf-ft)

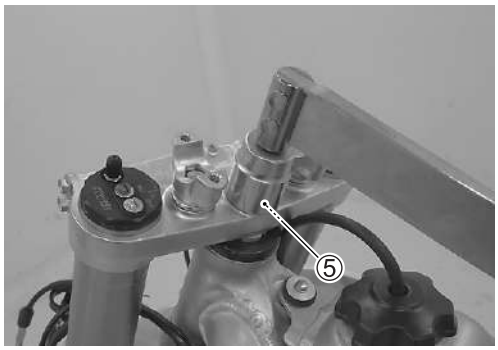

- Install the front fender ⑥ as shown.
- Reinstall the front forks. (☞4-89)
- Install the front wheel. (☞4-57)

ⓑ Washer
ⓒ Bolt

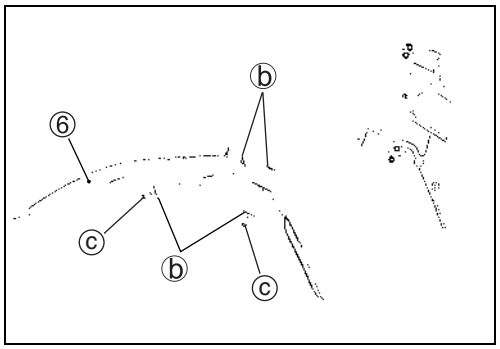

- Insert the collar ⑦ and throttle assembly ⑧ onto the handlebars.

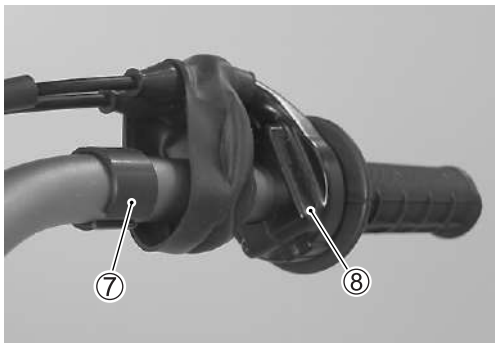

- Set the punch mark on the handlebar holder ⑨ forward.
- Align the matching mark Ⓑ on the handlebars with the matching surface of the handlebar holder ⑨.
- Tighten the handlebar clamp bolts ⑩ to the specified torque.

NOTE:
When tightening the handlebar clamp bolts ⑩, first tighten the bolts Ⓒ.

Handlebar clamp bolt: 25 N·m (2.5 kgf-m, 18.0 lbf-ft)

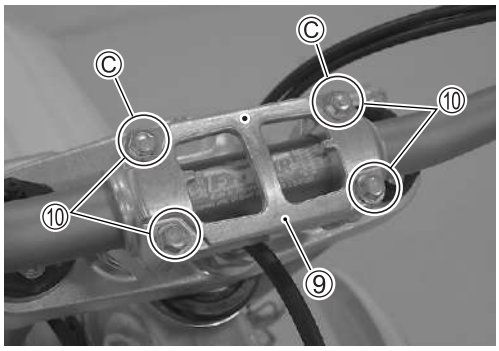

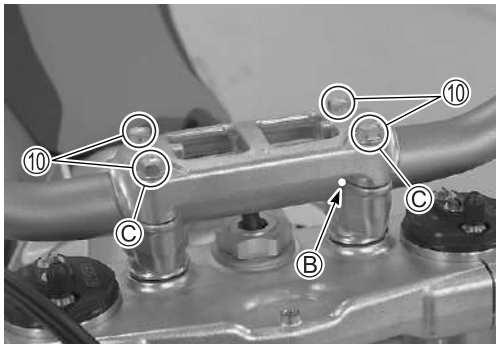

- Tighten the handlebar holder set nuts ⑪ to the specified torque.

Handlebar holder set nut: 44 N·m (4.4 kgf-m, 32.0 lbf-ft)

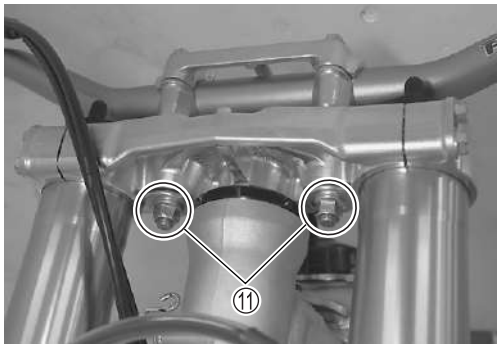

- Apply grease to the sliding surface of the handlebars and throttle grip.
- Apply grease to the throttle cable spool.

99000-25350: SUZUKI WATER RESISTANT GREASE EP2 or equivalent

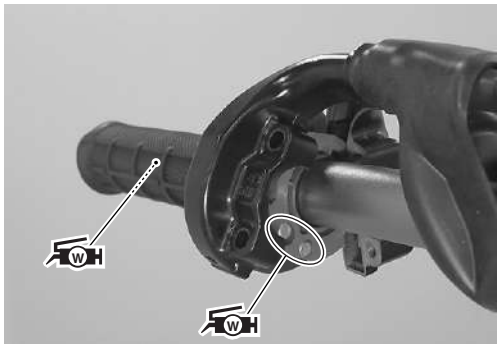

- Align the matching mark Ⓓ on the handlebars with the throttle holder matching surface.
- Tighten the throttle case screws ⑫ to the specified torque.

Throttle case screw: 3.8 N·m (0.38 kgf-m, 2.75 lbf-ft)

NOTE:
Make sure that the cut-line Ⓔ of collar ⑦ to lower side

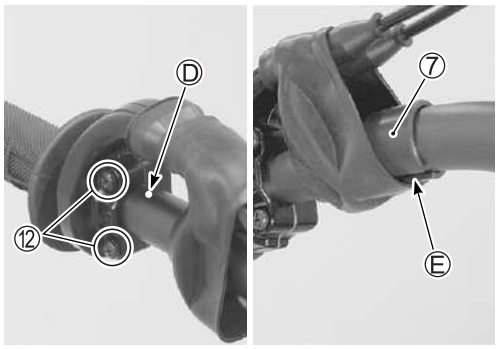

- Align the matching mark Ⓕ on the handlebars with the master cylinder matching surface.
- Tighten the upper bolt Ⓖ first temporarily to provide clearance on the lower side and then tighten both the bolts ⑬ to the specified torque.

Front brake master cylinder holder bolt :
10 N·m (1.0 kgf-m, 7.0 lbf-ft)

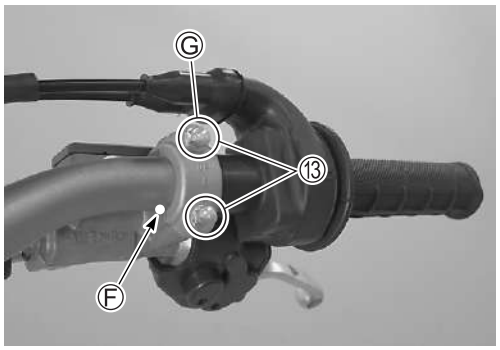

Handlebars

- Apply handle grip bond Ⓐ to the left handlebar end and inside of the left grip.

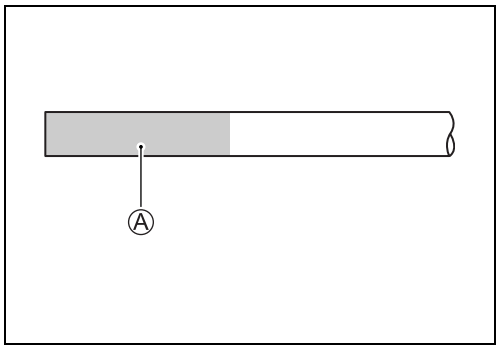

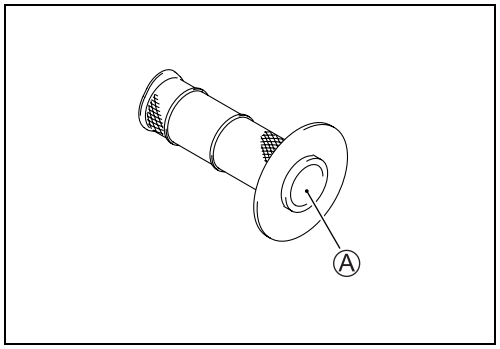

- Align the "△" mark on the left grip with the matching mark Ⓑ on the left handlebar end.

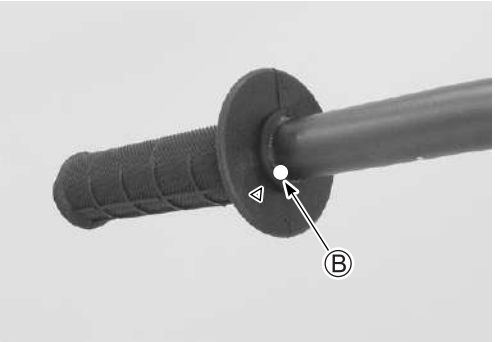

- Align the matching mark Ⓒ on the handlebars with the clutch lever holder matching surface.
- Tighten the upper bolt Ⓓ first temporarily to provide clearance on the lower side and then tighten both the bolts ① to the specified torque.

Clutch lever holder bolt: 3 N·m (0.3 kgf-m, 2.0 lbf-ft)

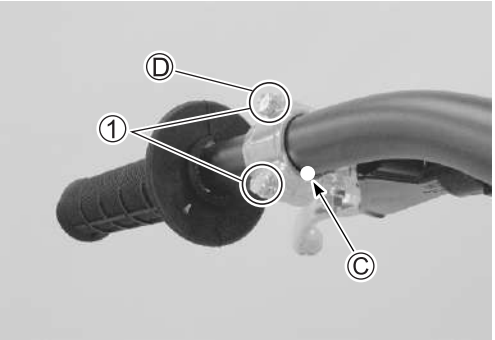

- Position the S-HAC clamp to the matching mark Ⓔ on the handlebars.
- Install the S-HAC switch ②.
- Install the engine stop switch ③ and clamps ④.
- Install the front number plate and handlebar pad.

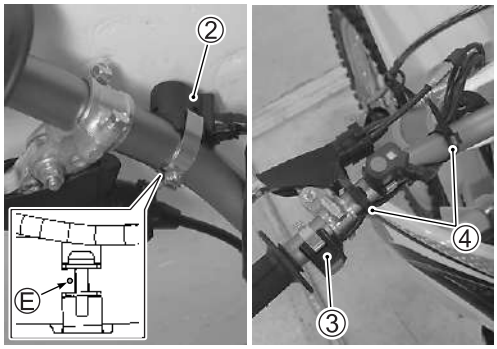

INSPECTION AFTER INSTALLATION

- Front fork (☞2-44)
- Steering (☞2-47)
- Wiring harness, cable and hose routing (☞5-10, -21)
- Handlebars set-up (☞5-24)

REAR SUSPENSION

REAR SHOCK ABSORBER

REMOVAL

- Place a block under the chassis tube.
- Remove the seat and right frame cover. (☞4-2)
- Loosen the air cleaner outlet tube clamp screw ①.

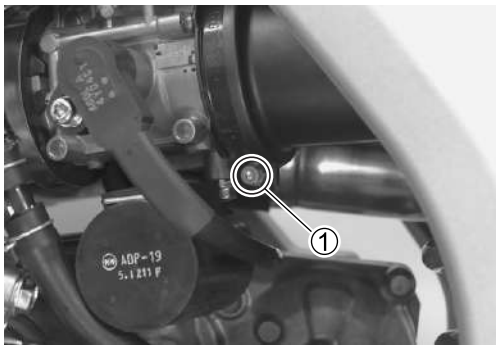

- Remove the rubber band ②.
- Disconnect the IAT sensor coupler ③ and remove the clamp ④.

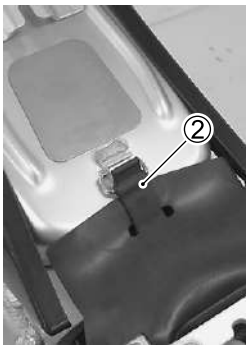

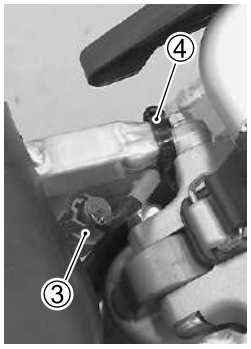

- Loosen the muffler connector clamp bolt ⑤.
- Remove the muffler ⑦ by removing its bolts ⑥.
- Remove the seat rail assembly ⑩ by removing the bolts ⑧ and nut ⑨.

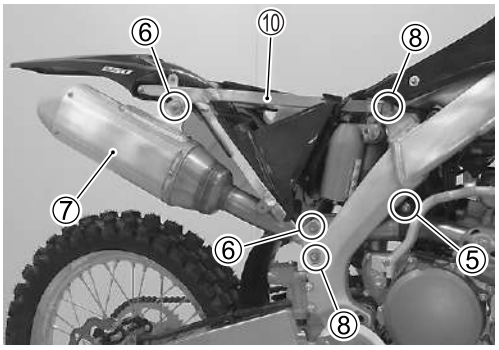

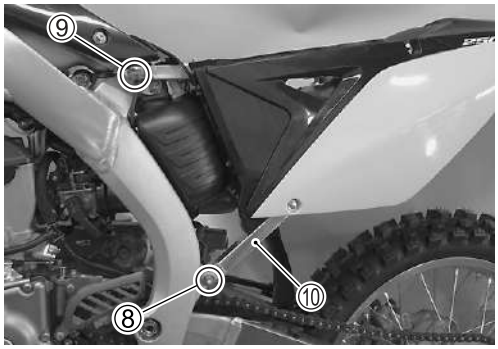

- Remove the rear shock absorber upper mounting bolt and nut ⑪.

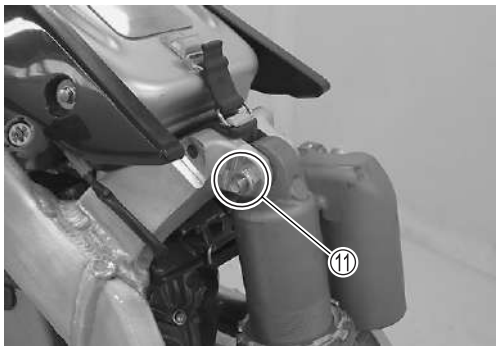

- Remove the rear shock absorber lower mounting bolt and nut ⑫.

NOTE:
If necessary, move the swingarm up or down to facilitate this mounting bolt/nut removal.

- Remove the rear shock absorber.

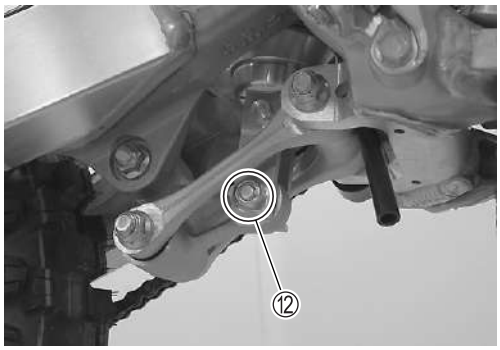

SPRING REPLACEMENT

- Loosen the lock-nut ① with the special tool and turn it fully to the end of the thread.
- Turn the adjuster ② as well as the lock-nut ①.

NOTE:
When reinstalling the spring, record the spring set length before loosening the lock-nut ①. (☞4-103)

TOOL 09910-60611: Adjustable hook wrench

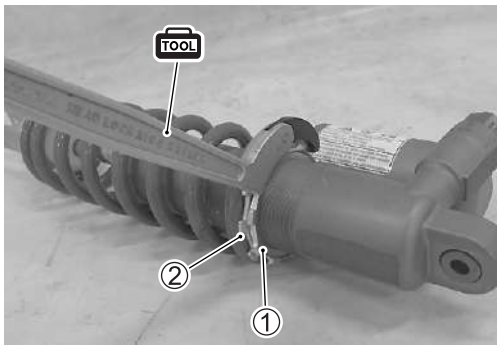

- Depress the bump rubber ③ to stopper side ④.

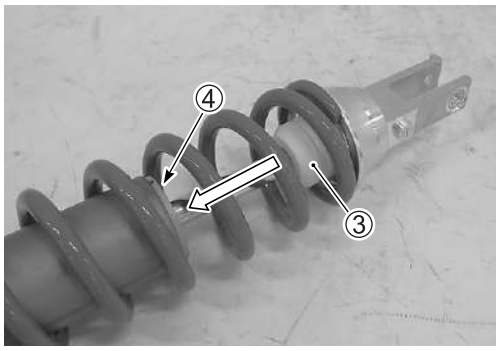

- Remove the spring guide ⑤, spring seat ⑥ and spring ⑦.
- Remove the adjuster and lock-nut.

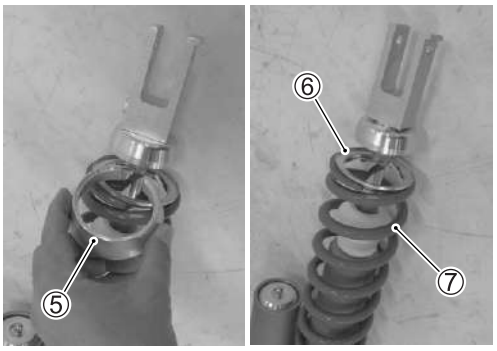

- Install the lock-nut, adjuster and spring.

NOTE:
Install the spring as its painted side Ⓐ (small diameter side) faces bottom.

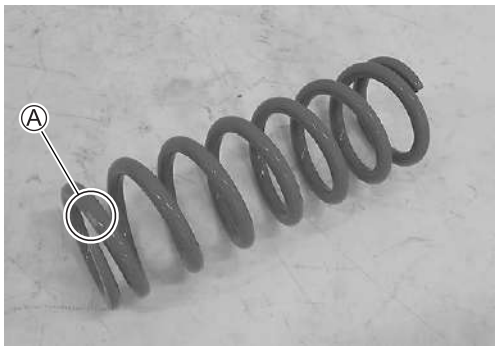

- Install the spring seat and spring guide.

NOTE:
The spring guide end gap Ⓑ must not be aligned with the spring end Ⓒ.

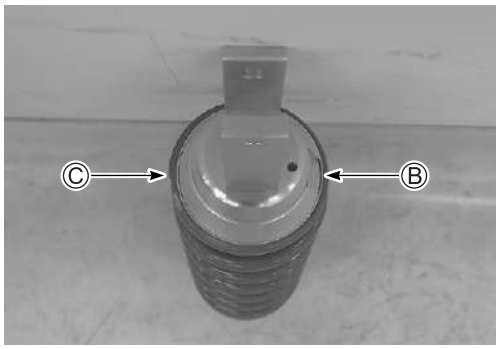

NOTE:
Align the adjuster assembly Ⓓ with the rebound damping force adjuster (high speed) Ⓔ.

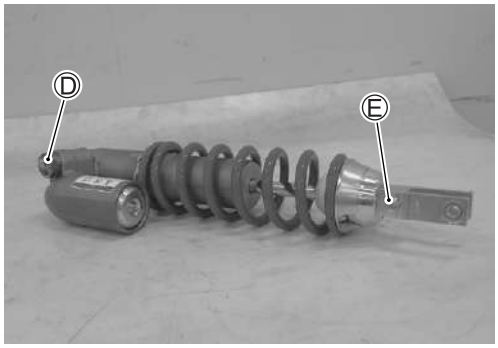

- Adjust the spring set length and tighten the lock-nut.

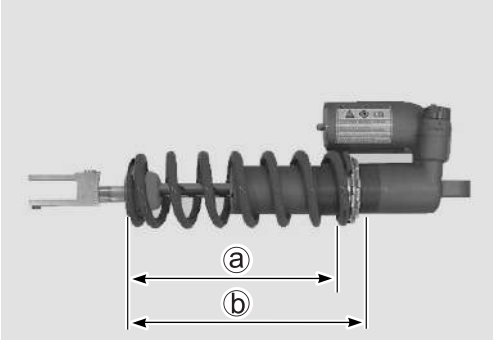

DATA Standard spring set length:
6.0 mm (0.24 in) compressed from spring free length
Spring set length adjustable range:
239 – 252 mm (9.4 – 9.9 in)
[at spring free length 255 mm (10.0 in)]
ⓐ: Hardest spring setting
ⓑ: Softest spring setting

Spring adjuster lock-nut: 30 N·m (3.0 kgf-m, 21.5 lbf-ft)

NOTE:
Be sure to perform the rear suspension tuning procedure after installing the rear shock absorber. (☞3-18)

INSTALLATION

Install the rear shock absorber in the reverse order of removal. Pay attention to the following points:

- Tighten the rear shock absorber lower mounting nut ① to the specified torque.

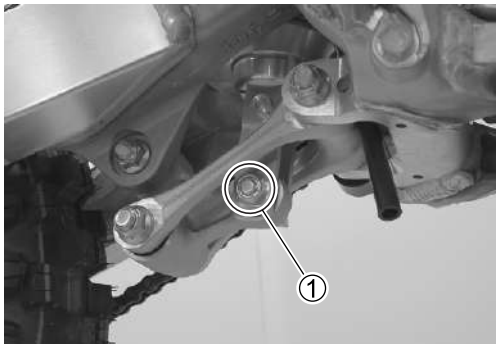

NOTE:
If necessary, move the swingarm up or down to facilitate this mounting bolt/nut tightening.

Rear shock absorber lower mounting nut:
50 N·m (5.0 kgf-m, 36.0 lbf-ft)

- Tighten the upper mounting nut ② to the specified torque.

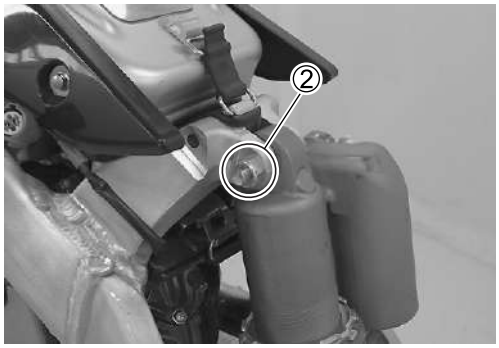

Rear shock absorber upper mounting nut:
50 N·m (5.0 kgf-m, 36.0 lbf-ft)

SWINGARM

REMOVAL

- Place the motorcycle on a block to lift rear wheel off the ground.
- Remove the rear wheel. (☞4-58)
- Remove the chain guide bolts ① and nuts.
- Remove the chain guide plate ② and chain guide ③.

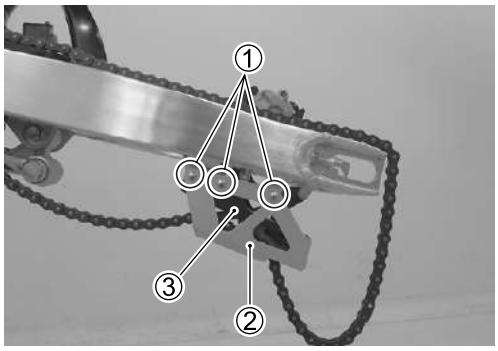

- Remove the master cylinder mounting bolts ④ and brake hose guide screw ⑤.
- Remove the rear brake caliper ⑥ from the swingarm.

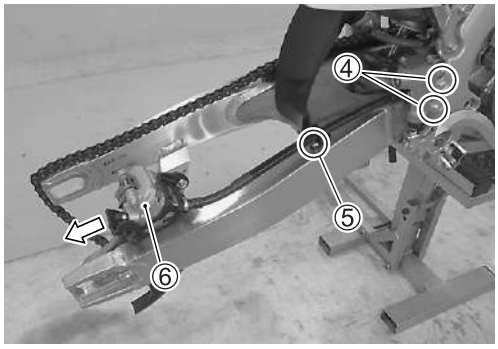

- Remove the cushion rod bolt and nut ⑦.
- Remove the cushion lever bolt and nut ⑧.

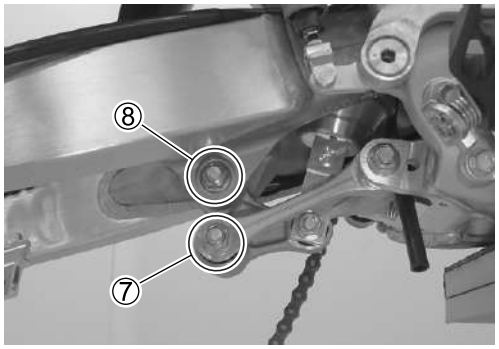

- Remove the swingarm pivot nut ⑨ and washer ⑩.

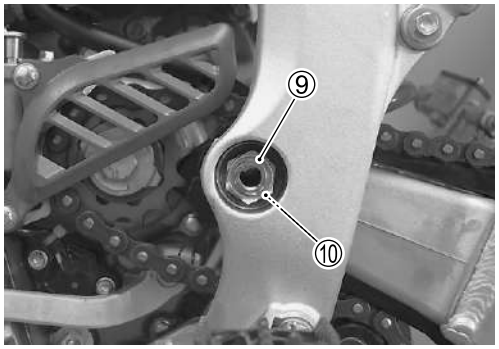

- Depress the rear brake pedal ⑪ and remove the pivot shaft ⑫.
- Remove the swingarm.

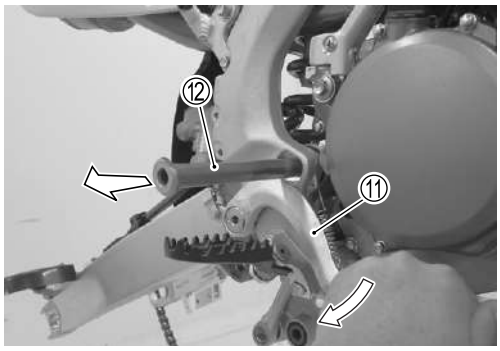

- Remove the chain buffer ⑭ by removing its screws ⑬.

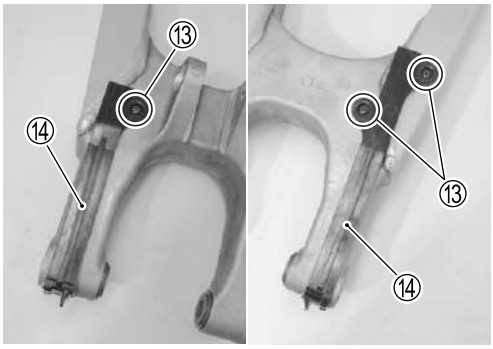

- Remove the plates ⑯ by removing their screws ⑮.

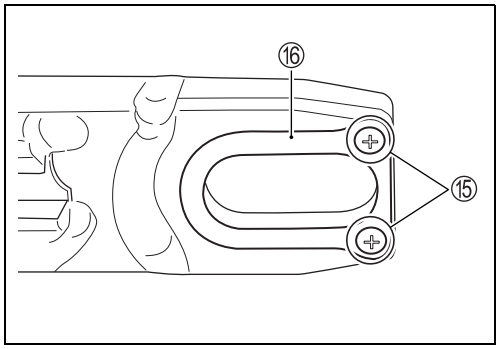

- Remove the following parts from the swingarm.
  Spacer ⑰
  Oil seal ⑱
  Washer ⑲
  Thrust bearing ⑳
  Dust seal ㉑
  Spacer ㉒
  Washer ㉓

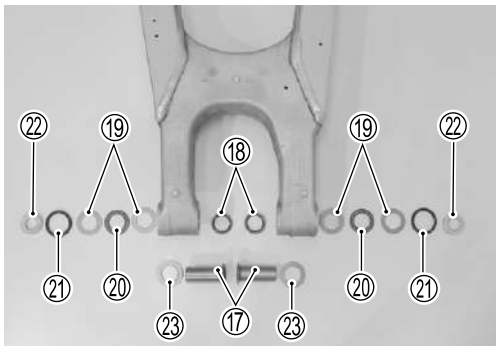

INSTALLATION

Install the swingarm in the reverse order of removal. Pay attention to the following points:

- Install the following parts into the swingarm.

① Oil seal	⑤ Washer
② Spacer	⑥ Dust seal
③ Washer	⑦ Spacer
④ Thrust bearing	⑧ Washer

- Apply grease to the dust seals, bearings and oil seals.

99000-25011: SUZUKI SUPER GREASE "A" or equivalent

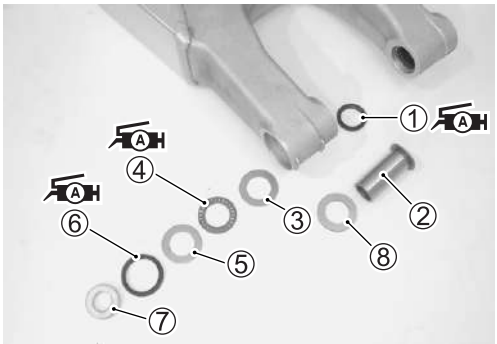

- Apply a small quantity of thread lock to the plate screws ⑨.

99000-32150: THREAD LOCK CEMENT "1322D" or equivalent

- Tighten the plate screws ⑨ securely.

Swingarm rear axle plate screw: 3 N·m (0.3 kgf-m, 2.0 lbf-ft)

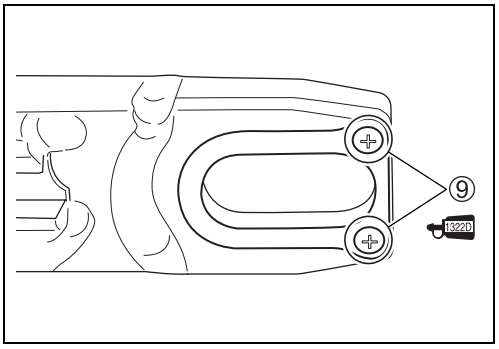

- Install the chain buffer.

- Install the swingarm.
- Tighten the swingarm pivot nut ⑩ to the specified torque.

Swingarm pivot nut: 70 N·m (7.0 kgf-m, 50.5 lbf-ft)

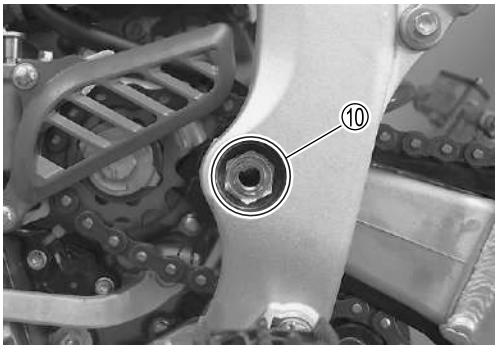

- Install the cushion lever ⑪ and cushion rod ⑫.
- Tighten the cushion lever nut ⑬ and cushion rod nut ⑭ to the specified torque.

Cushion lever nut: 80 N·m (8.0 kgf-m, 58.0 lbf-ft)
Cushion rod nut: 80 N·m (8.0 kgf-m, 58.0 lbf-ft)

- Tighten the master cylinder mounting bolts ⑮ to the specified torque.

Rear brake master cylinder mounting bolt: 10 N·m (1.0 kgf-m, 7.0 lbf-ft)

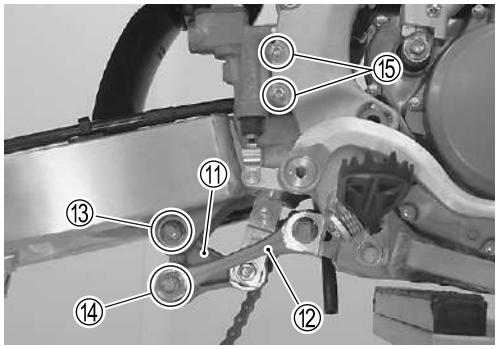

- Install the chain guide.
- Install the rear wheel. (☞4-61)
- Adjust the drive chain slack. (☞2-37)

REAR SUSPENSION LINKAGE

REMOVAL

- Place a block under the chassis tubes.
- Remove the cushion rod bolts and nuts ①.
- Remove the cushion lever bolt and nut ②.
- Remove the shock absorber lower mounting bolt and nut ③.

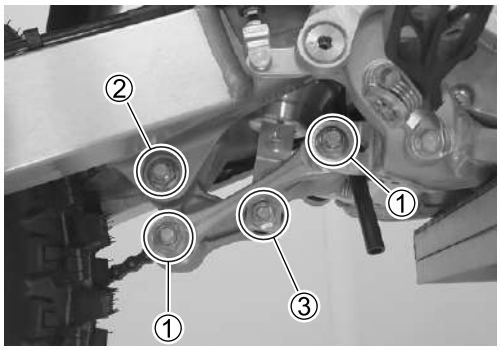

- Remove the collars, dust seals, washers and spacers.

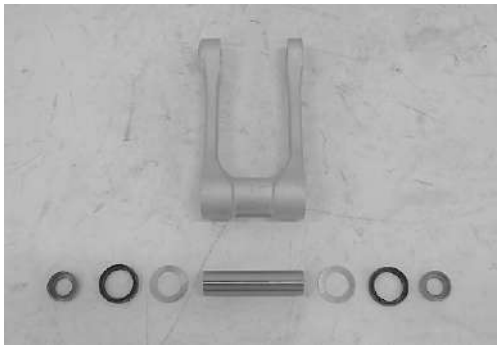

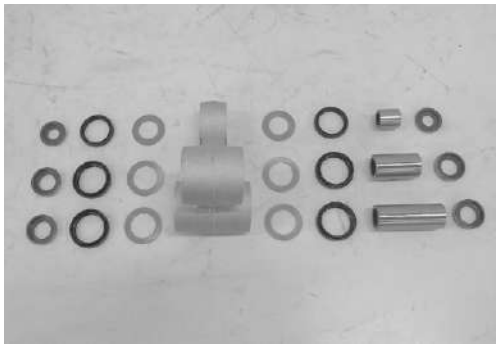

INSTALLATION

Install the rear suspension linkage in the reverse order of removal. Pay attention to the following points:

- Install the washers ①.
- Position the dust seals ② so that the manufacturer's code indicated side of the seals face outside.
- Apply grease to the dust seals ②.

99000-25011: SUZUKI SUPER GREASE "A" or equivalent

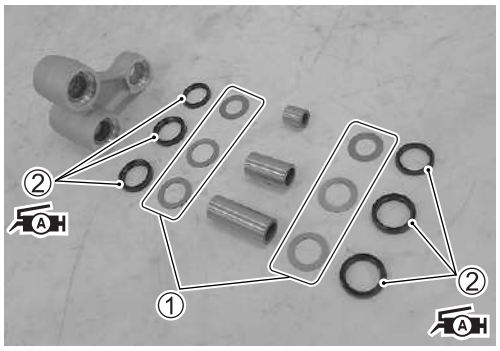

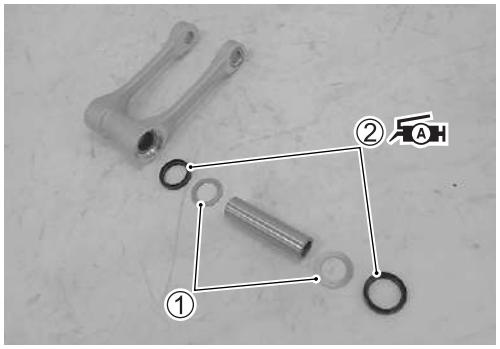

- Tighten the cushion lever, cushion rod and swingarm nuts to the specified torque.

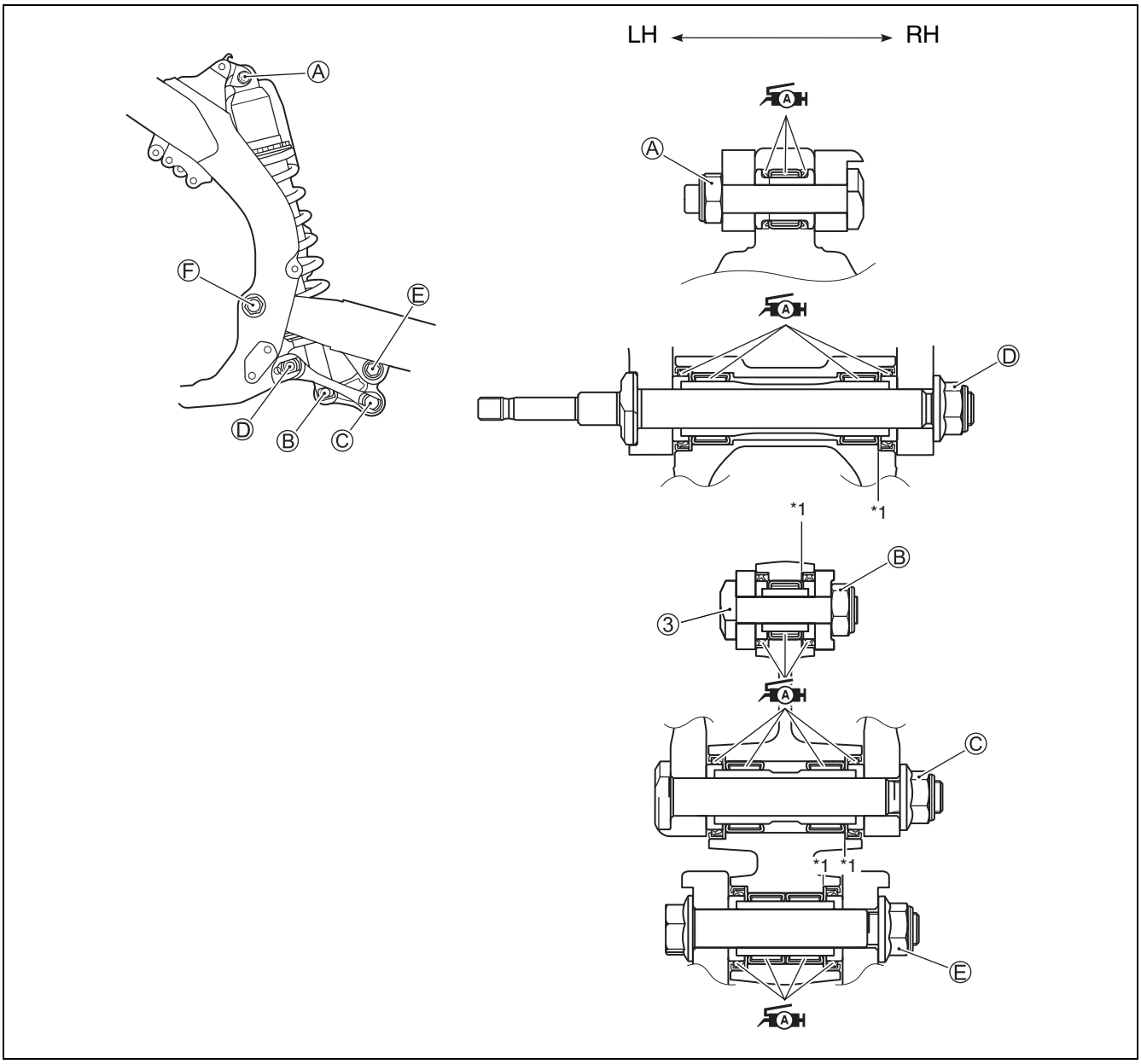

③: Rear suspension linkage bolt

*1 Make sure that the bearing's end is not protruding beyond the lever surface or rod surface. (Both sides)

Tightening torque:
Ⓐ: 50 N·m (5.0 kgf-m, 36.0 lbf-ft)
Ⓑ: 50 N·m (5.0 kgf-m, 36.0 lbf-ft)
Ⓒ: 80 N·m (8.0 kgf-m, 58.0 lbf-ft)
Ⓓ: 80 N·m (8.0 kgf-m, 58.0 lbf-ft)
Ⓔ: 80 N·m (8.0 kgf-m, 58.0 lbf-ft)
Ⓕ: 70 N·m (7.0 kgf-m, 50.5 lbf-ft)

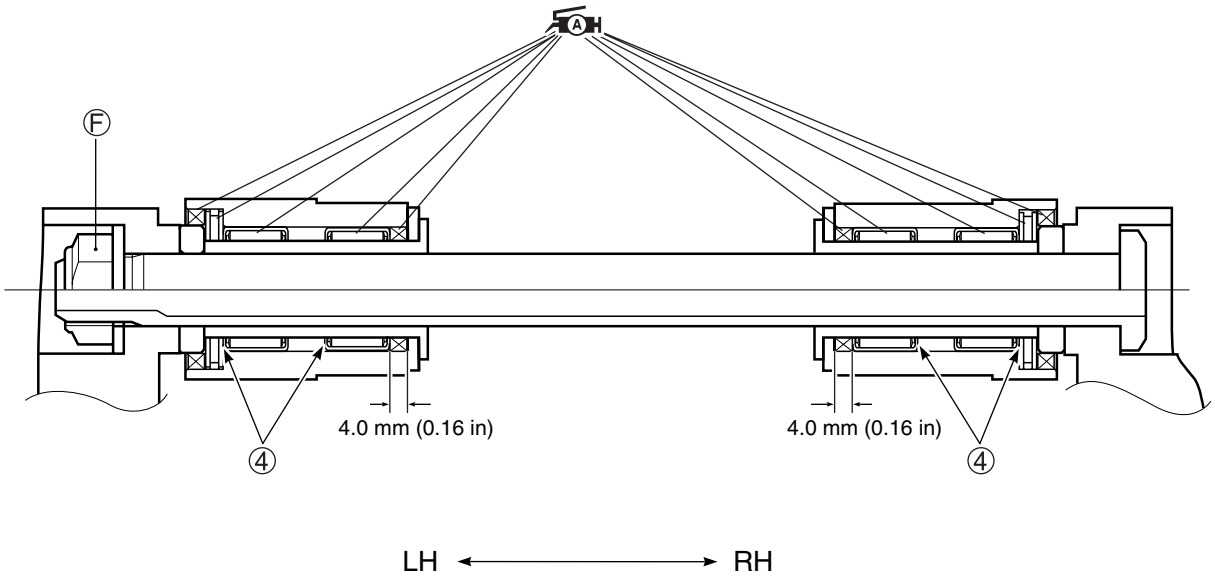

④: Stamped mark

Tightening torque:

Ⓕ: 70 N·m (7.0 kgf-m, 50.5 lbf-ft)

NOTICE
Improperly reassembled rear suspension linkage bolts can interfere with suspension movement and damage the rear suspension linkage. **Make sure that the rear shock absorber rebound damping adjuster (high speed) on the bottom bracket of the rear shock absorber is located to the right side. Insert the rear shock absorber lower mounting bolt ③ from the left side. Make sure that the nut Ⓑ is in the recess of the rear shock absorber bottom bracket.**

SERVICING INFORMATION

CONTENTS

TIGHTENING TORQUE

ENGINE

ITEM		N·m	kgf-m	lbf-ft
Cylinder head cover bolt		14	1.4	10.0
Spark plug		11	1.1	8.0
Spark plug cap retainer bolt		11	1.1	8.0
Cylinder head bolt	(Initial)	25	2.5	18.0
	(Final)	51	5.1	37.0
Cylinder head base bolt		10	1.0	7.0
Cylinder base bolt		10	1.0	7.0
Camshaft journal holder bolt		10	1.0	7.0
Primary drive gear nut		110	11.0	79.5
Magneto rotor nut		80	8.0	58.0
Clutch sleeve hub nut		90	9.0	65.0
Clutch spring set bolt		10	1.0	7.0
Gearshift arm stopper bolt		23	2.3	16.5
Gearshift cam driven gear pin		24	2.4	17.5
Gearshift cam stopper bolt		10	1.0	7.0
Pawl lifter screw		8.5	0.85	6.0
Kick starter guide bolt		10	1.0	7.0
Cam chain tension adjuster mounting bolt		10	1.0	7.0
Cam chain tension adjuster cap bolt		5.5	0.55	4.0
Cam chain tensioner bolt		10	1.0	7.0
Cam chain guide retainer bolt		10	1.0	7.0
Right crankcase cover bolt		11	1.1	8.0
Bearing retainer screw		8.5	0.85	6.0
Reed valve guide bolt		4.5	0.45	3.25
Engine oil drain plug		21	2.1	15.0
Engine oil drain No.2 plug		12	1.2	8.5
Engine oil strainer cap		21	2.1	15.0
Oil filter cap bolt		11	1.1	8.0
Oil gallery plug		10	1.0	7.0
Oil pump idle gear shaft		23	2.3	16.5
Oil pump No.1 bolt		5.5	0.55	4.0
Oil pump No.2 bolt		11	1.1	8.0
Oil strainer No.2 bolt		5.5	0.55	4.0
Crankcase bolt		11	1.1	8.0
Clutch cover bolt		11	1.1	8.0
TDC plug		14	1.4	10.0
Magneto cover bolt		11	1.1	8.0
Magneto stator bolt		5.5	0.55	4.0
Crankshaft hole plug		11	1.1	8.0
Ignition coil mounting bolt		10	1.0	7.0
Condenser bracket bolt		10	1.0	7.0

ITEM	N·m	kgf-m	lbf-ft
Engine mounting upper bolt	45	4.5	32.5
Engine mounting lower nut	66	6.6	47.5
Engine mounting front nut	66	6.6	47.5
Engine mounting upper bracket nut	40	4.0	29.0
Engine mounting front bracket nut	40	4.0	29.0
Engine sprocket bolt	32	3.2	23.0
Engine sprocket cover bolt	11	1.1	8.0
Kick starter lever bolt	29	2.9	21.0
Kick starter lever screw	10	1.0	7.0
Intake pipe bolt	10	1.0	7.0
Exhaust pipe nut	23	2.3	16.5
Muffler connector clamp bolt	17	1.7	12.5
Muffler mounting front bolt	21	2.1	15.0
Muffler mounting rear bolt	23	2.3	16.5
Exhaust pipe cover bolt	11	1.1	8.0
Rear muffler body mounting bolt	10	1.0	7.0

FI SYSTEM AND INTAKE AIR SYSTEM

ITEM	N·m	kgf-m	lbf-ft
CKP sensor bolt	5.5	0.55	4.0
IAT sensor mounting screw	1.3	0.13	0.95
GP switch mounting bolt	6.5	0.65	4.7
Fuel delivery pipe mounting screw	3.5	0.35	2.5
Fuel pipe mounting screw	3.5	0.35	2.5
Fuel pump mounting bolt	10	1.0	7.0
TP sensor mounting screw	3.5	0.35	2.5
ECT sensor	12	1.2	8.5
TO sensor bracket bolt	8.5	0.85	6.0
Air cleaner mounting bolt	5	0.5	3.5

COOLING SYSTEM

ITEM	N·m	kgf-m	lbf-ft
Water pump impeller	8	0.8	6.0
Water pump case bolt	11	1.1	8.0
Water pump joint bolt	10	1.0	7.0
Engine coolant drain bolt	11	1.1	8.0
Water hose clamp screw	1.5	0.15	1.0

CHASSIS

ITEM	N·m	kgf-m	lbf-ft
Handlebar clamp bolt	25	2.5	18.0
Handlebar holder set nut	44	4.4	32.0
Front fork upper clamp bolt (right and left)	23	2.3	16.5
Front fork lower clamp bolt (right and left)	23	2.3	16.5
Steering stem head nut	120	12.0	87.0
Steering stem nut	45 N·m (4.5 kgf-m, 32.5 lbf-ft) then turn counterclockwise 1/4 – 1/2		
Fork cap	45	4.5	32.5
Lock-nut/fork cap	29	2.9	21.0
Center bolt	75	7.5	54.0
Air valve (front fork)	5.5	0.55	4.0
Fork protector bolt	4.9	0.49	3.5
Front brake master cylinder holder bolt	10	1.0	7.0
Rear brake master cylinder mounting bolt	10	1.0	7.0
Rear brake master cylinder rod lock-nut	6	0.6	4.5
Brake lever pivot bolt	6	0.6	4.5
Brake lever pivot bolt lock-nut	6	0.6	4.5
Brake pedal pivot bolt	29	2.9	21.0
Brake hose union bolt (front and rear)	23	2.3	16.5
Front brake hose guide bolt	3	0.3	2.0
Front brake caliper mounting bolt	26	2.6	19.0
Brake pad mounting pin (front and rear)	18	1.8	13.0
Front brake caliper axle bolt (caliper)	25	2.5	18.0
Front brake caliper axle bolt (bracket)	28	2.8	20.0
Rear brake caliper axle bolt (caliper)	43	4.3	31.0
Rear brake caliper axle bolt (bracket)	13	1.3	9.5
Brake air bleeder valve (front and rear)	6	0.6	4.5
Disk plate bolt (front)	11	1.1	8.0
Disk plate bolt (rear)	26	2.6	19.0
Front axle nut	35	3.5	25.5
Front axle holder bolt	21	2.1	15.0
Rear axle nut	100	10.0	72.5
Rear sprocket nut	30	3.0	21.5
Drive chain roller bolt/nut	23	2.3	16.5
Spoke nipple	6	0.6	4.5
Front wheel rim lock	14	1.4	10.0
Rear wheel rim lock	17	1.7	12.5
Swingarm pivot nut (engine mounting)	70	7.0	50.5
Swingarm rear axle plate screw	3	0.3	2.0
Rear shock absorber mounting nut (upper and lower)	50	5.0	36.0
Adjuster assembly	23	2.3	16.5
Cushion lever nut	80	8.0	58.0
Cushion rod nut (front and rear)	80	8.0	58.0

ITEM	N·m	kgf-m	lbf-ft
Spring adjuster lock-nut	30	3.0	21.5
Seat rail bolt and nut (upper and lower)	23	2.3	16.5
Footrest bolt	35	3.5	25.5
Cable adjuster lock-nut (throttle and clutch)	4.5	0.45	3.25
Clutch cable bracket bolt	10	1.0	7.0
Throttle case screw	3.8	0.38	2.75
Clutch lever holder bolt	3	0.3	2.0
Clutch lever pivot bolt	4	0.4	3.0
Clutch lever pivot bolt lock-nut	4	0.4	3.0
Radiator cover upper bolt	10	1.0	7.0
Radiator cover bolt	10	1.0	7.0

Each fastener should be tightened to the torque specified in “TIGHTENING LIST”. If no description or specification is provided, refer to the following tightening torque chart for the applicable torque for each fastener.

Strength	Unit	Thread diameter (Nominal diameter) Ⓐ [mm]								
		4	5	6	8	10	12	14	16	18
A equivalent of 4T strength fastener without flange 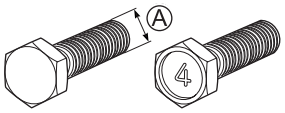	N·m	1.5	3.0	5.5	13	29	45	65	105	160
	kgf-m	0.15	0.30	0.55	1.3	2.9	4.5	6.5	10.5	16.0
	lbf-ft	1.0	2.0	4.0	9.5	21.0	32.5	47.0	76.0	115.5
A equivalent of 4T strength fastener with flange 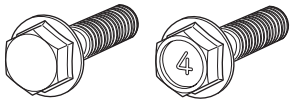	N·m	1.7	3.3	6	14	32	50	72	116	176
	kgf-m	0.17	0.33	0.6	1.4	3.2	5.0	7.2	11.6	17.6
	lbf-ft	1.0	2.5	4.5	10.0	23.0	36.0	52.0	84.0	127.5
A equivalent of 7T strength fastener without flange and small crown shape bolt *1 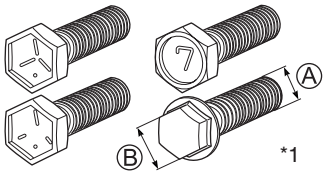	N·m	2.3	4.5	10	23	50	85	135	210	240
	kgf-m	0.23	0.45	1.0	2.3	5.0	8.5	13.5	21.0	24.0
	lbf-ft	1.5	3.5	7.0	16.5	36.0	61.5	97.5	152.0	173.5
A equivalent of 7T strength fastener with flange except small crown shape bolt 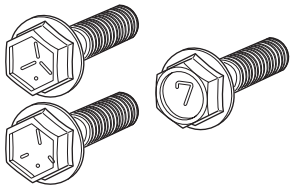	N·m	2.5	5	11	25	55	94	149	231	264
	kgf-m	0.25	0.5	1.1	2.5	5.5	9.4	14.9	23.1	26.4
	lbf-ft	2.0	3.5	8.0	18.0	40.0	68.0	107.5	167.0	191.0

*1: Small crown shape bolt (crown shape bolt with flange either “Ⓐ = 5 & Ⓑ = 7” or “Ⓐ = 6 & Ⓑ = 8”)

SPECIAL TOOLS

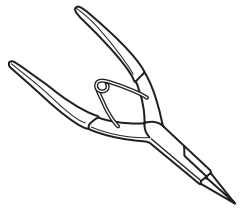 **09900-06107 Snap ring pliers (External)**	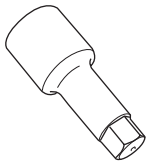 **09900-18720 Hexagon bit socket (14 mm)**	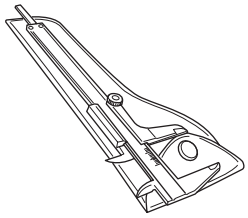 **09900-20101 Vernier calipers (150 mm)**	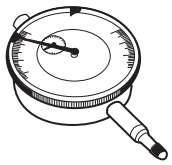 **09900-20607 Dial gauge**	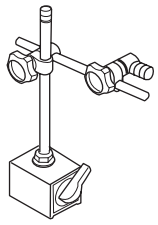 **09900-20701 Dial gauge chuck**
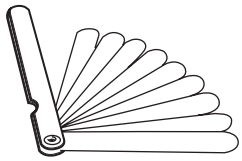 **09900-20803 Thickness gauge**	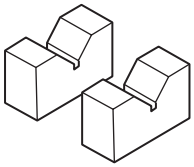 **09900-21304 V blocks**	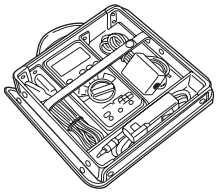 **09900-25008 Multi circuit tester set**	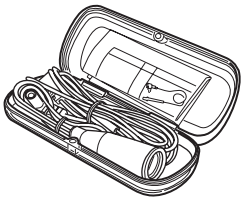 **09900-25009 Needle point probe set**	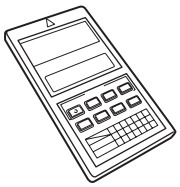 **09900-26006 Engine tachometer**
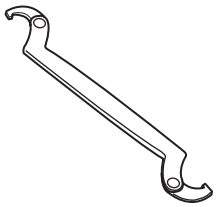 **09910-60611 Adjustable hook wrench**	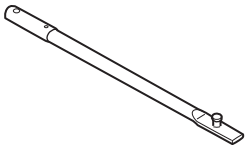 **09920-31020 Extension handle**	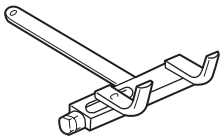 **09920-53740 Clutch sleeve hub holder**	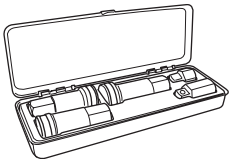 **09930-10121 Spark plug socket set**	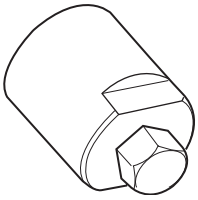 **09930-34951 Rotor remover**

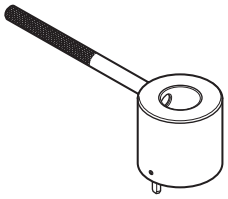 **09930-44561** **Rotor holder**	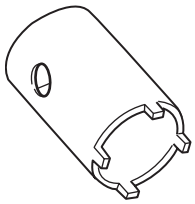 **09940-14911** **Steering stem nut socket**	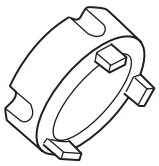 **09940-14960** **Steering stem nut socket wrench**	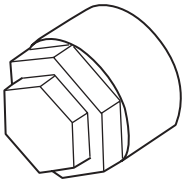 **09940-34581** **Front fork assem-bling attachment (F)**	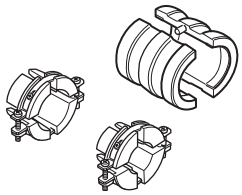 **09940-52861** **Front fork oil seal installer set**
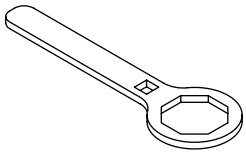 **09955-04910** **Front fork cap wrench (49 mm)**	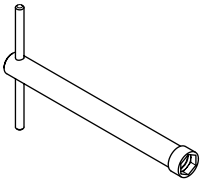 **09955-04920** **Front fork cylinder holder**			

WIRING DIAGRAM

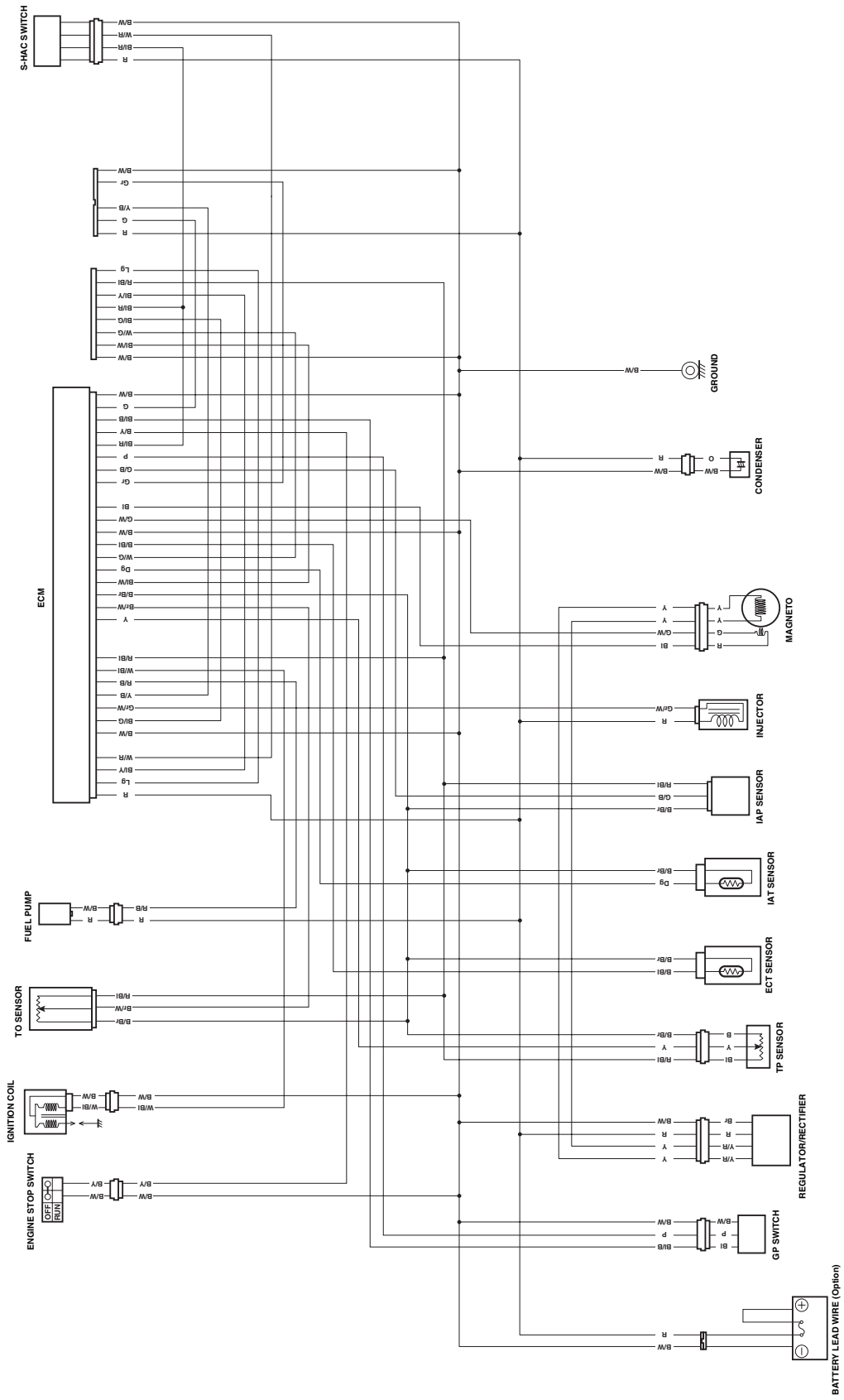

CABLE ROUTING

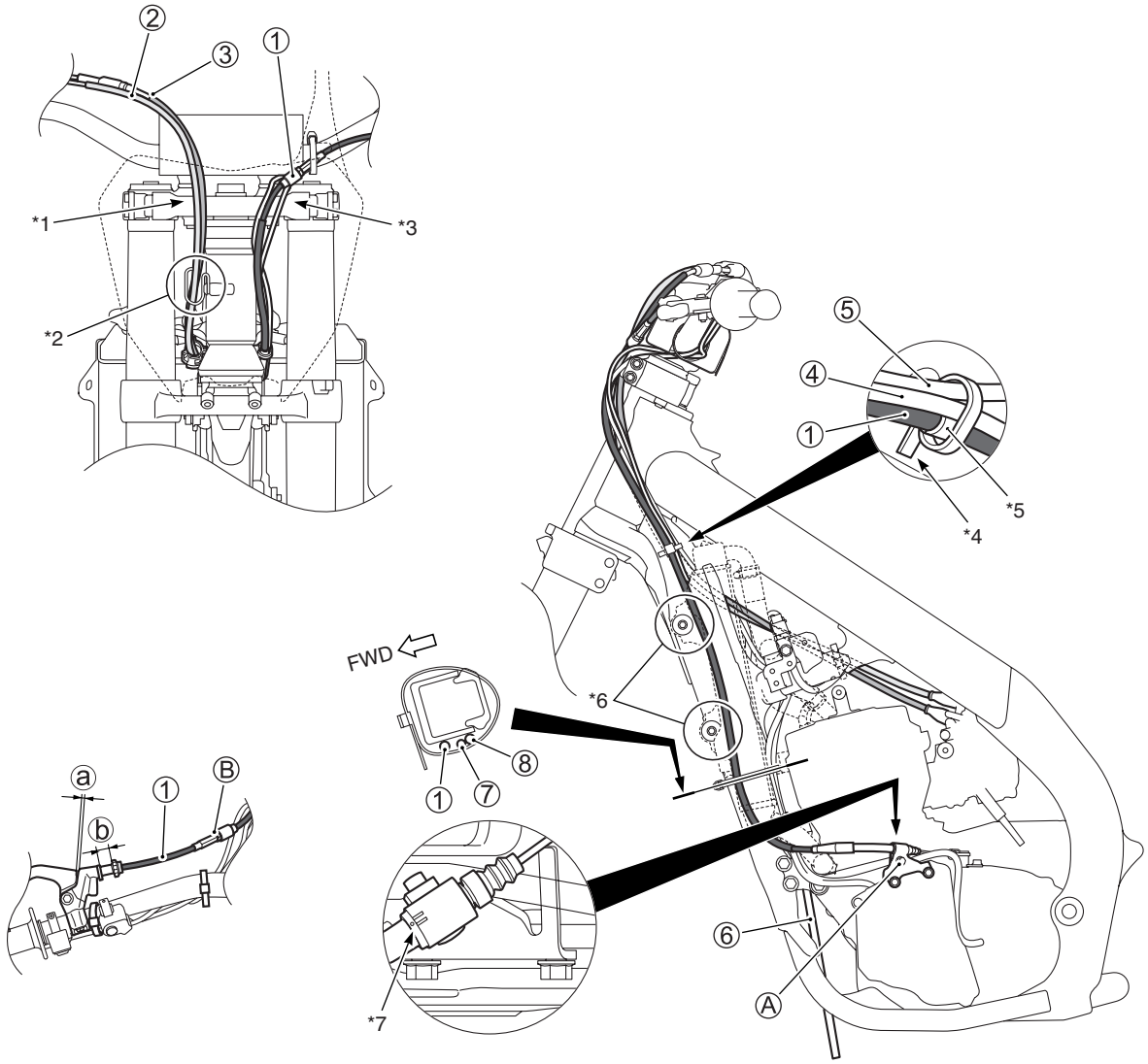

①	Clutch cable	⑦	Magneto lead wire
②	Throttle cable (Returning cable)	⑧	GP switch lead wire
③	Throttle cable (Pulling cable)	Ⓐ	Clutch cable bracket bolt
④	S-HAC switch lead wire	Ⓑ	Cable adjuster lock-nut
⑤	Engine stop switch lead wire	ⓐ	2 – 3 mm (0.08 – 0.12 in)
⑥	Radiator overflow hose	ⓑ	14 – 16 mm (0.55 – 0.63 in)

*1	Pass the throttle cables to right side of the front number plate tightening part.
*2	Pass the throttle cables into the cable guide.
*3	Pass the clutch cable to left side of the front number plate tightening part.
*4	After clamping, cut off the tip of the clamp leaving 10 – 20 mm (0.4 – 0.8 in).
*5	Bind the clutch cable at white protector portion with the clamp.
*6	Pass the clutch cable between the radiator bracket and frame.
*7	Align the matching mark of the clutch cable between two line marks of the clutch cable bracket.

ITEM	N·m	kgf-m	lbf-ft
Ⓐ	10	1.0	7.0
Ⓑ	4.5	0.45	3.25

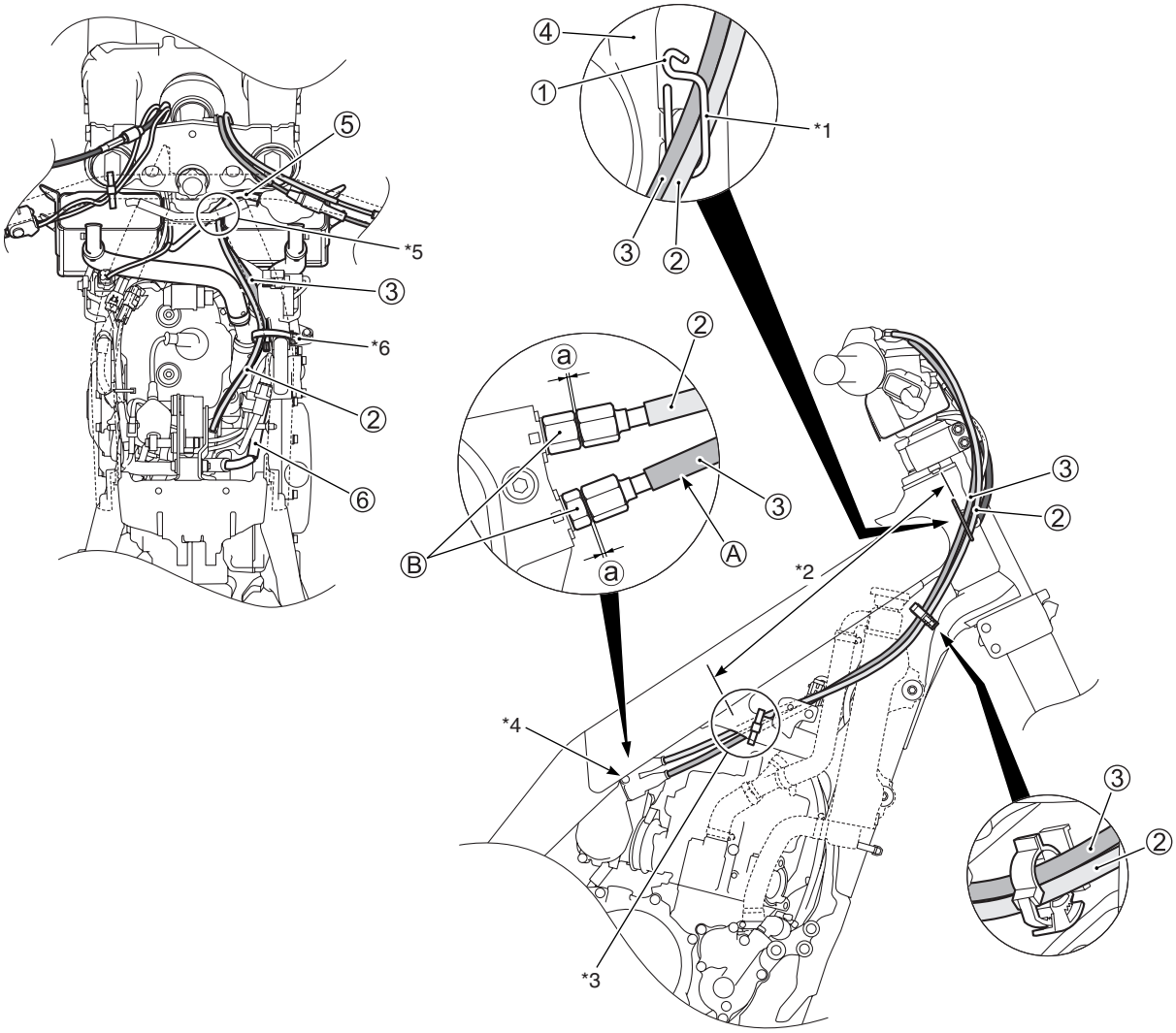
④
①
*1
⑤
*5
③
②
*6
②
⑥
ⓐ
②
③
Ⓑ
Ⓐ
ⓐ
③
②
*2
*4
③
②
*3

①	Cable guide	⑥	Wiring harness
②	Throttle cable (Returning cable)	Ⓐ	Marking
③	Throttle cable (Pulling cable)	Ⓑ	Cable adjuster lock-nut
④	Frame head pipe	ⓐ	0 – 1.5 mm (0 – 0.06 in)
⑤	Radiator overflow hose		

*1	Install the cable guide in parallel with the frame head pipe.
*2	Twist the throttle cable to 180° within this range (anticlockwise, facing forward).
*3	Pass the throttle cables inside of the frame bridge.
*4	Fit the projection of throttle cable boot on the bolt head.
*5	Pass the throttle cables between the radiator and frame. Pass the throttle cables under the radiator overflow hose and radiator bypass hose.
*6	Face the tip of clamp upward and locked part of clamp to outside.

ITEM	N·m	kgf-m	lbf-ft
Ⓑ	4.5	0.45	3.25

THROTTLE BODY INSTALLATION

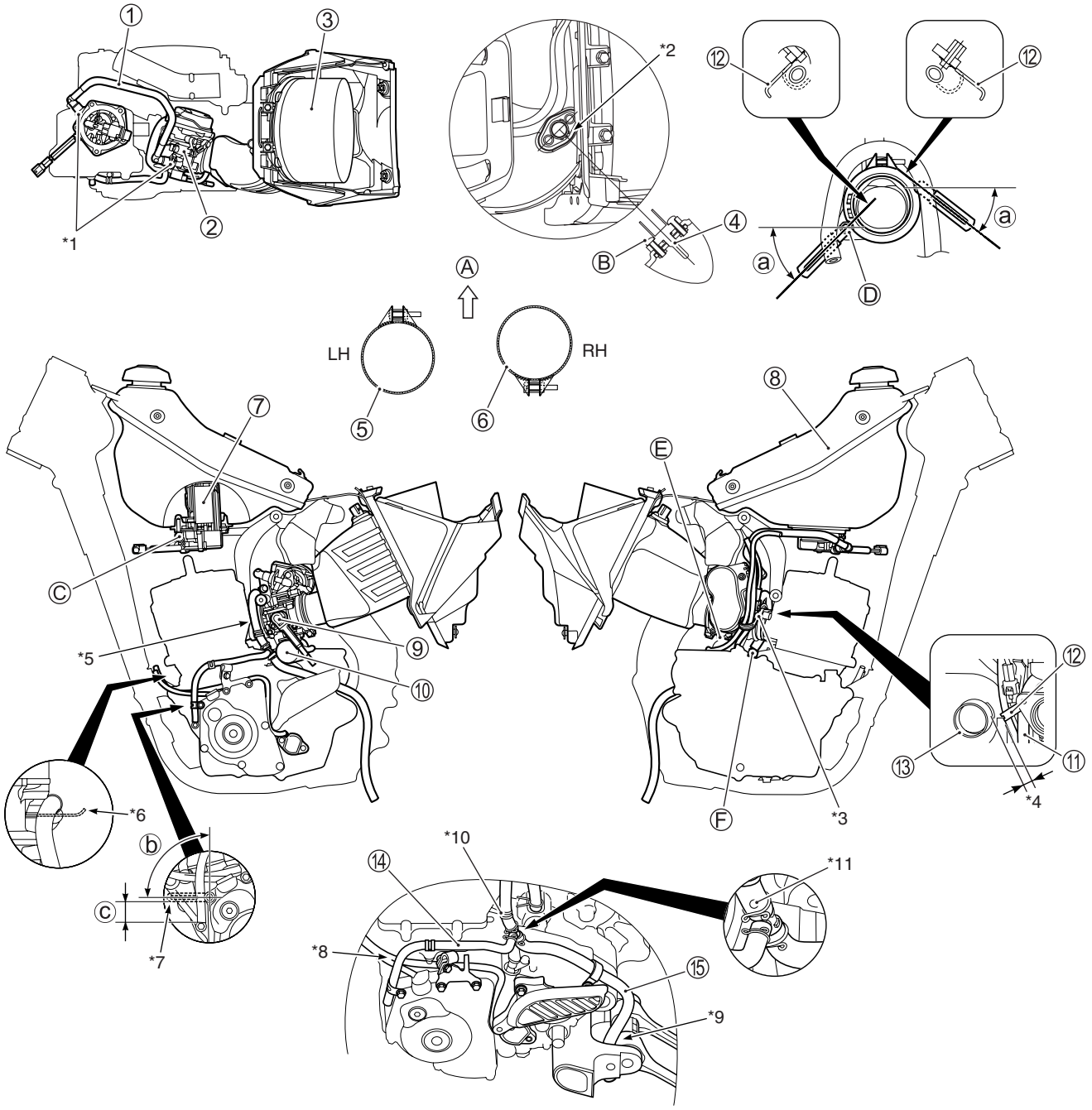

①	Fuel hose	⑬	Exhaust pipe
②	Throttle body	⑭	Breather hose No.3
③	Air cleaner	⑮	Breather hose No.2
④	IAT sensor	Ⓐ	Upper
⑤	Intake pipe clamp	Ⓑ	IAT sensor mounting screw
⑥	Air cleaner outlet tube clamp	Ⓒ	Fuel pump mounting bolt
⑦	Fuel pump	Ⓓ	Intake pipe bolt
⑧	Fuel tank	Ⓔ	Condenser bracket bolt
⑨	TP sensor	Ⓕ	ECT sensor
⑩	Condenser	ⓐ	45 ± 10°
⑪	Breather hose No.1	ⓑ	90 ± 10°
⑫	Clamp	ⓒ	25 ± 5 mm (0.98 ± 0.20 in)

*1	After inserting the fuel hose connector, lock it by pushing the retainer.
*2	The lock part must face the left rear direction.
*3	Tighten the clamp together with intake pipe bolt.
*4	After clamping the breather hose No.1, secure a gap larger than 15 mm (0.6 in) between the exhaust pipe and the breather hose No.1 or between the exhaust pipe and the wiring harness.
*5	Do not slack the breather hose No.1 around the throttle body.
*6	Face the tip of clamp upward.
*7	Face the tip of clamp to engine side.
*8	Pass the breather hose No.3 outside of the GP switch lead wire and magneto lead wire.
*9	Pass the breather hose No.2 between the frame and cushion rod.
*10	Clamp the breather hose No.1.
*11	Face the white mark to left side.

ITEM	N·m	kgf-m	lbf-ft
Ⓑ	1.3	0.13	0.95
Ⓒ	10	1.0	7.0
Ⓓ	10	1.0	7.0
Ⓔ	10	1.0	7.0
Ⓕ	12	1.2	8.5

RADIATOR HOSE ROUTING

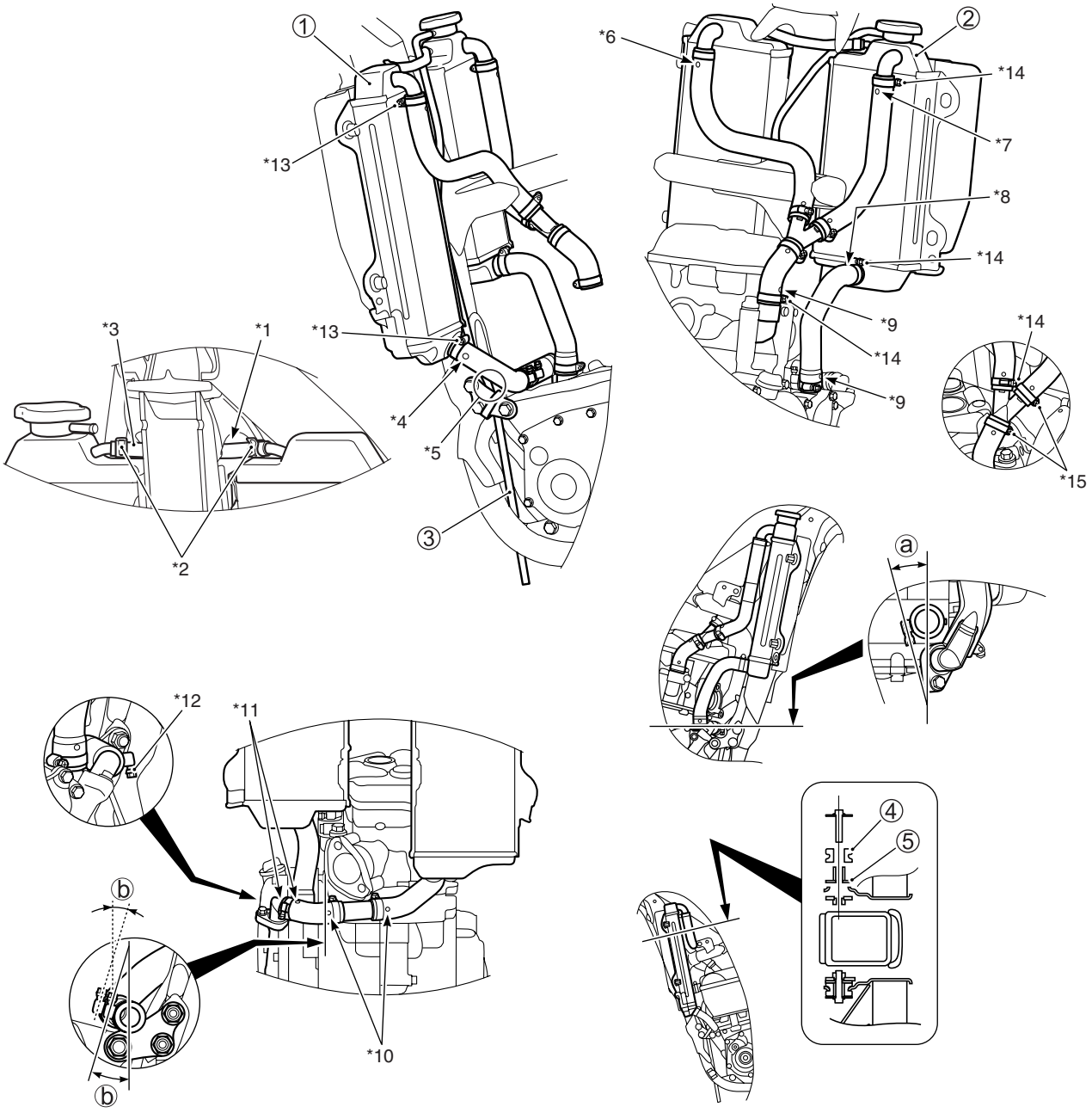

①	Radiator (LH)	⑤	Spacer
②	Radiator (RH)	ⓐ	15 ± 10°
③	Radiator overflow hose	ⓑ	20 ± 10°
④	Cushion		

*1	Pass the radiator bypass hose under the frame.
*2	Face the clamp end to the forward.
*3	Insert the white mark side of the hose to the radiator (RH).
*4	Face the pink mark to the left side.
*5	Pass the radiator overflow hose between the engine mounting lower brackets.
*6	Face the yellow mark to the backward.
*7	Face the white mark to the backward.
*8	Face the white mark to the upward.
*9	Face the pink mark to the right side.
*10	Face the blue mark to the forward.
*11	Align the pink marks.
*12	Face the screw head to the downward.
*13	Face the screw head to the left side.
*14	Face the screw head to the right side.
*15	Face the screw head to the backward.

EXHAUST PIPE AND MUFFLER INSTALLATION

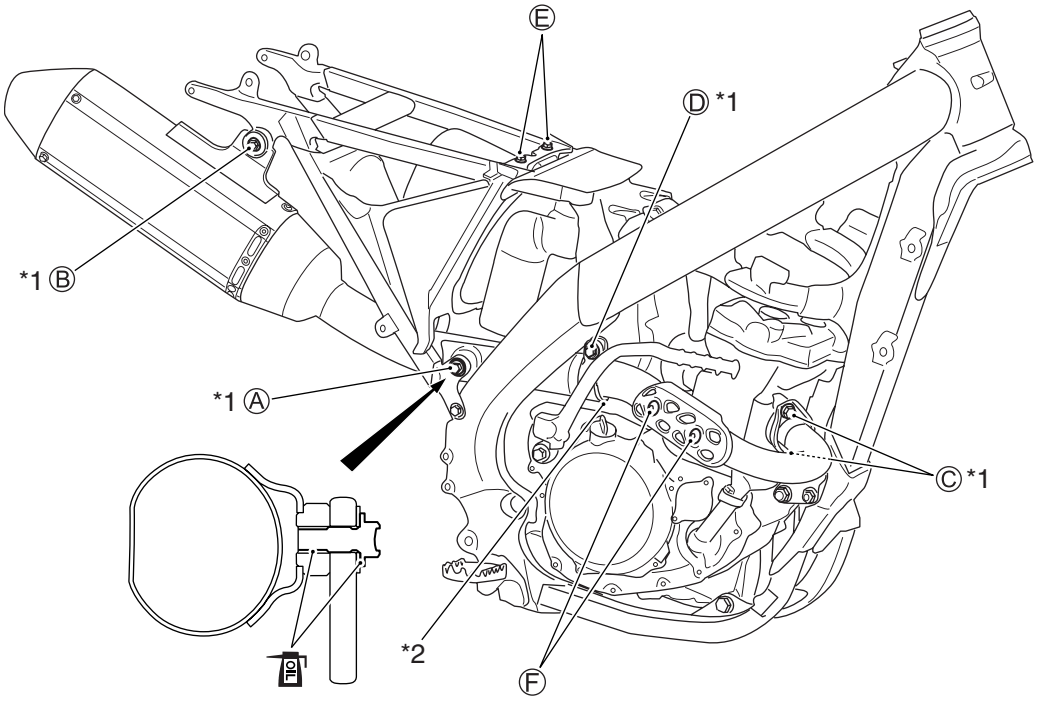

Ⓐ	Muffler mounting front bolt
Ⓑ	Muffler mounting rear bolt
Ⓒ	Exhaust pipe nut
Ⓓ	Muffler connector clamp bolt
Ⓔ	Air cleaner mounting bolt
Ⓕ	Exhaust pipe cover bolt

*1	Tighten the bolts and nuts to the specified torque in order of (Ⓐ↔Ⓑ)→Ⓒ→Ⓓ.
*2	Fit the convex part of connector clamp to the concave part of muffler.

ITEM	N·m	kgf-m	lbf-ft
Ⓐ	21	2.1	15.0
Ⓑ	23	2.3	16.5
Ⓒ	23	2.3	16.5
Ⓓ	17	1.7	12.5
Ⓔ	5	0.5	3.5
Ⓕ	11	1.1	8.0

CLUTCH CABLE ADJUSTER

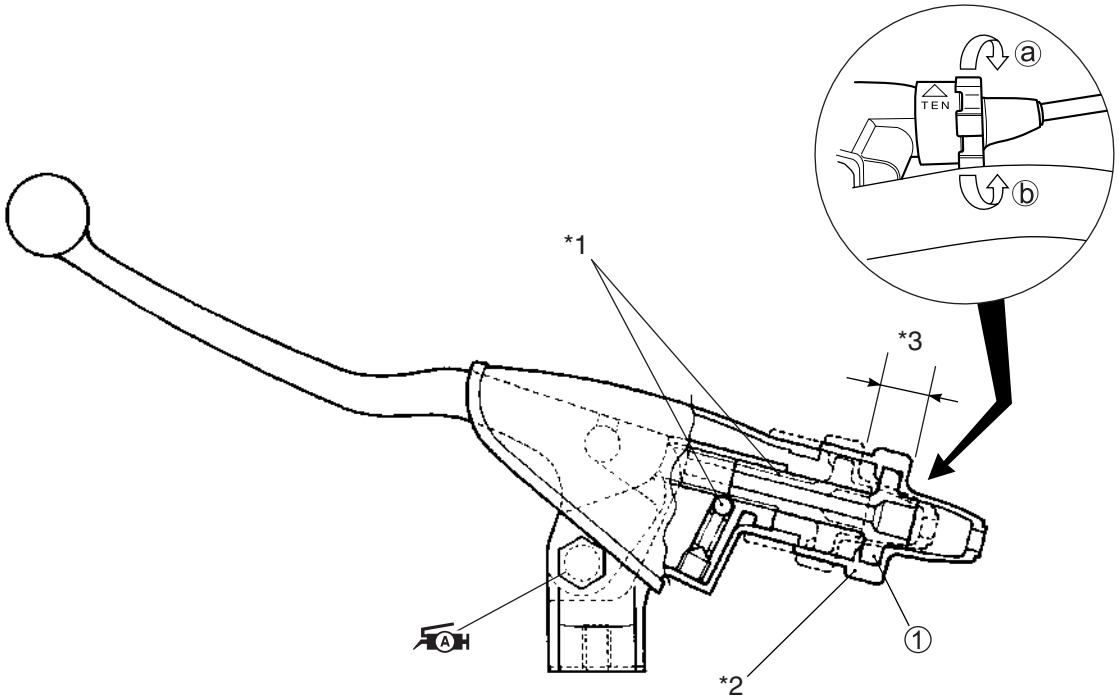

①	Clutch cable adjuster
ⓐ	Turn to tighten the clutch cable tension.
ⓑ	Turn to loosen the clutch cable tension.

*1	When the movement is felt heavier, clean this and apply grease.
*2	Do not apply grease to the rubber covers. Fit the cover positively.
*3	Adjustable range.

REAR BRAKE PEDAL SET-UP

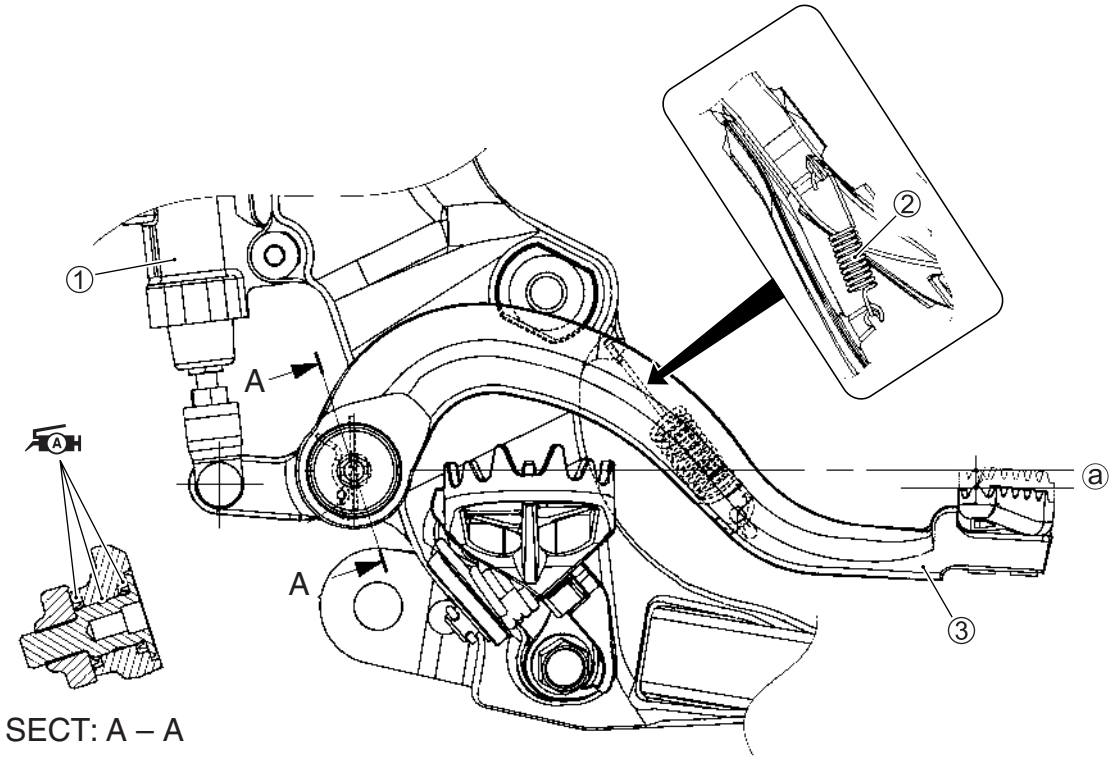

①	Rear brake master cylinder
②	Return spring
③	Brake pedal
ⓐ	0 – 10 mm (0 – 0.4 in)

FRONT BRAKE HOSE ROUTING

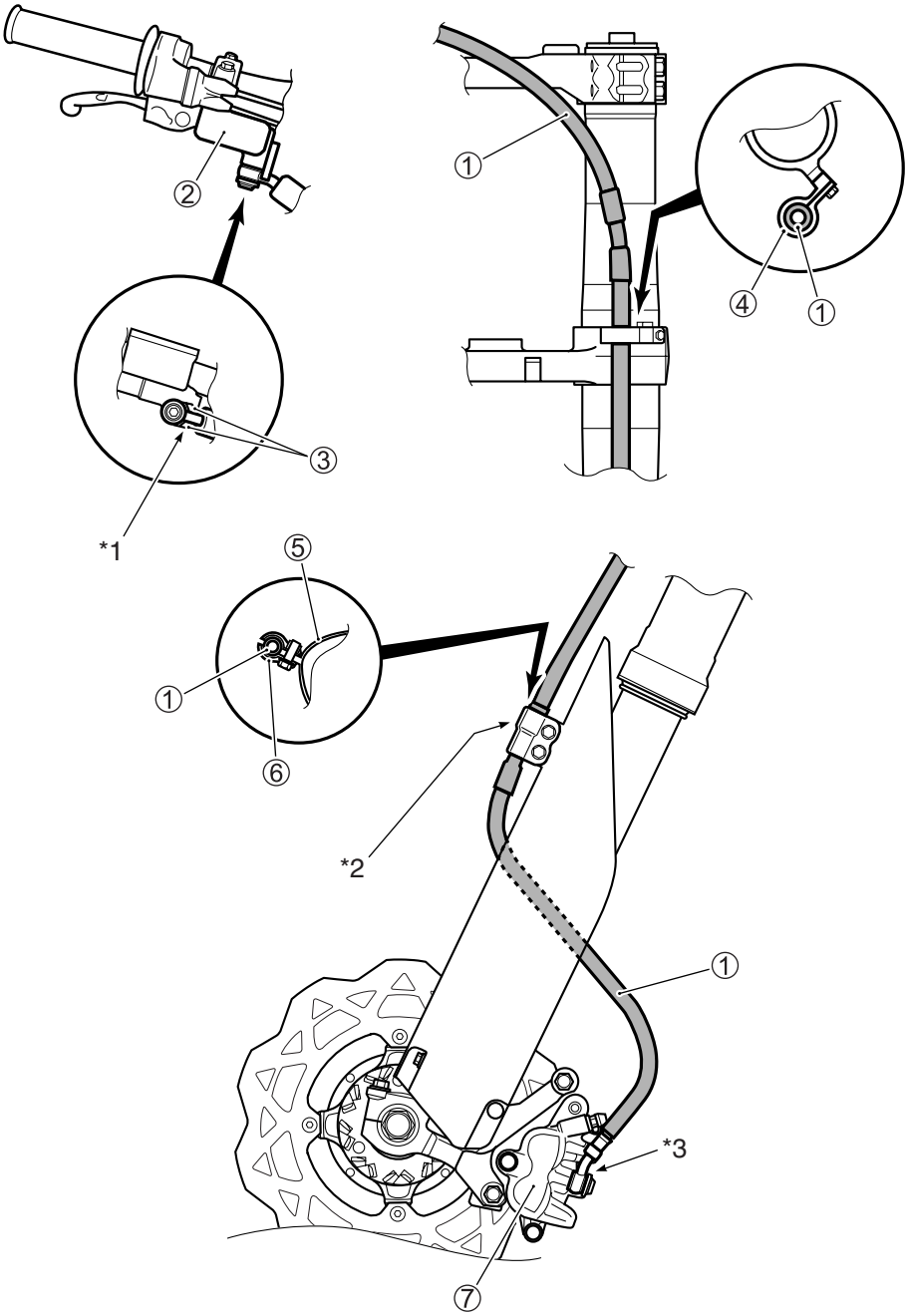

①	Front brake hose	⑤	Front fork protector
②	Front brake master cylinder	⑥	Clamp
③	Stopper	⑦	Front brake caliper
④	Hose guide		

*1	Set the brake hose end between the hose stoppers, then tighten the brake hose union bolt.
*2	Clamp the upper difference portion in brake hose diameter.
*3	After the brake hose union has contacted the stopper, tighten the union bolt.

REAR BRAKE HOSE ROUTING

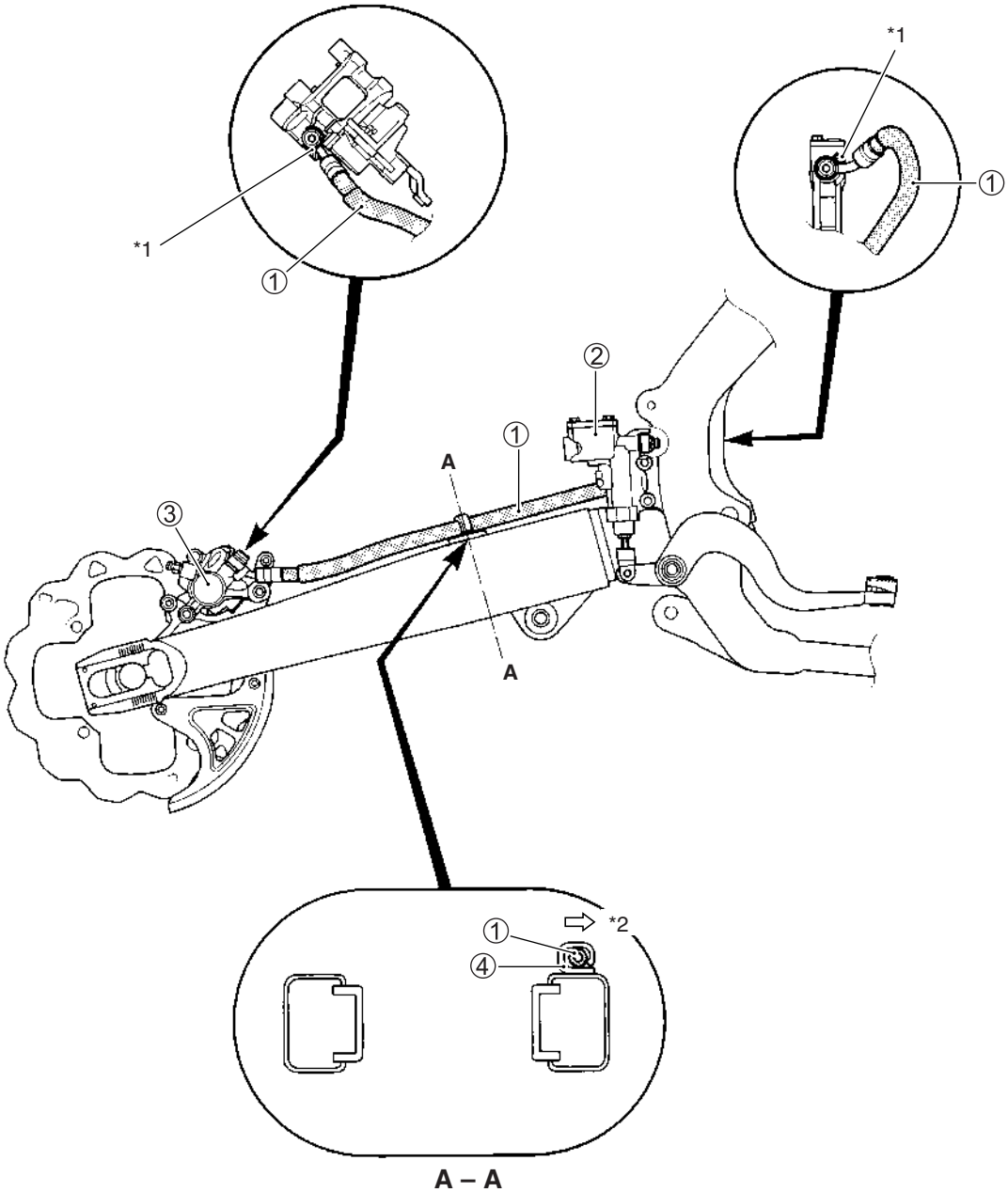

①	Rear brake hose	③	Rear brake caliper
②	Rear brake master cylinder	④	Hose guide

*1	Set the brake hose end between the hose stoppers, then tighten the brake hose union bolt.
*2	Outside

HANDLEBAR SET-UP

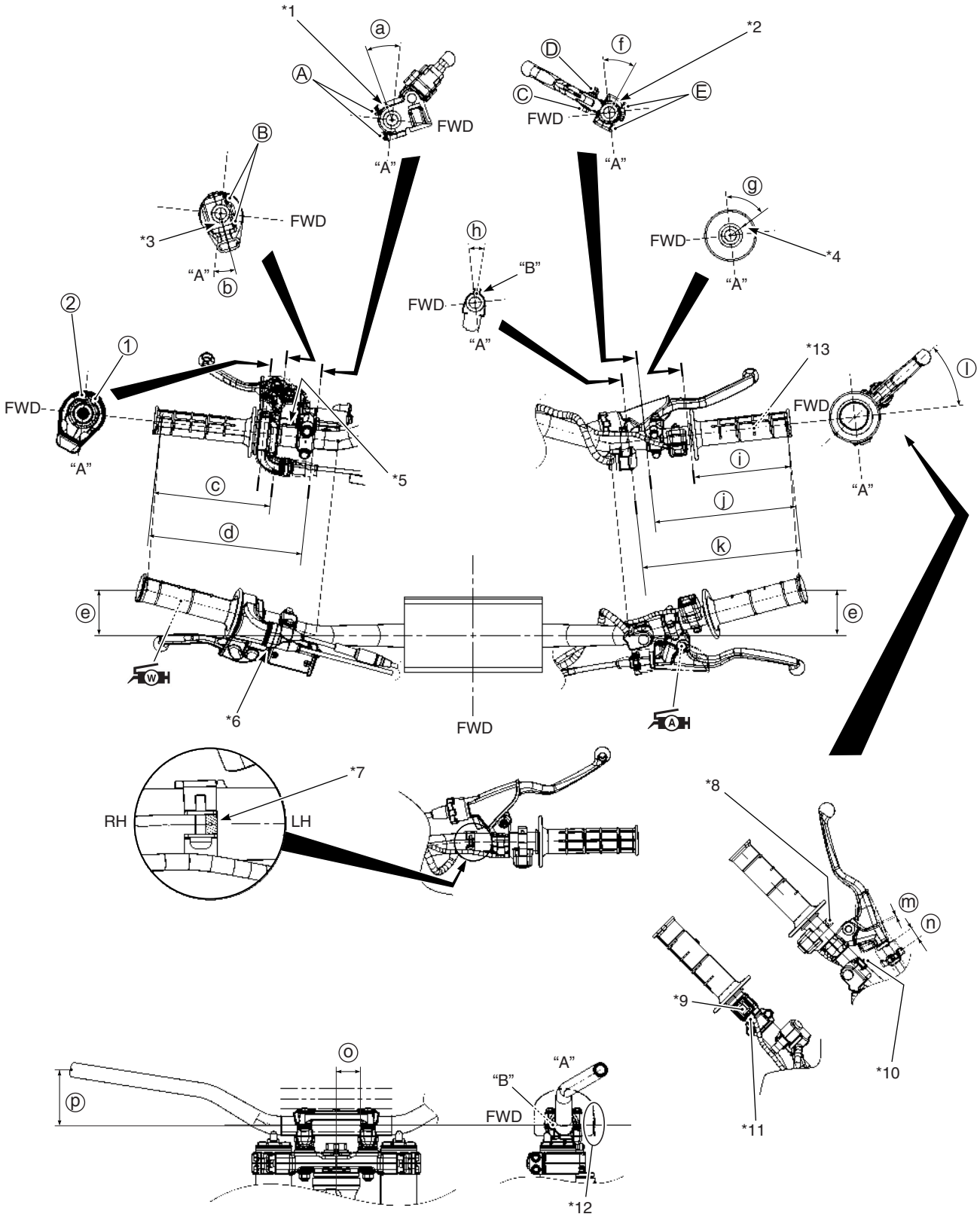

①	Throttle cable (pulling cable)	ⓔ	56 mm (2.2 in)
②	Throttle cable (returning cable)	ⓕ	35 ± 3.5°
“A”	Upper	ⓖ	60 ± 3.5°
“B”	Marking	ⓗ	16 ± 3.5°
Ⓐ	Front brake master cylinder holder bolt	ⓘ	121 ± 1 mm (4.76 ± 0.04 in)
Ⓑ	Throttle case screw	ⓙ	175 ± 1 mm (6.89 ± 0.04 in)
Ⓒ	Clutch lever pivot bolt	ⓚ	205 ± 1 mm (8.07 ± 0.04 in)
Ⓓ	Clutch lever pivot bolt lock-nut	ⓛ	35°
Ⓔ	Clutch lever holder bolt	ⓜ	2 – 3 mm (0.08 – 0.12 in)
ⓐ	24 ± 3.5°	ⓝ	14 – 16 mm (0.55 – 0.63 in)
ⓑ	15 ± 3.5°	ⓞ	37 ± 2 mm (1.46 ± 0.08 in)
ⓒ	145 ± 1 mm (5.71 ± 0.04 in)	ⓟ	85 mm (3.3 in)
ⓓ	190 ± 1 mm (7.48 ± 0.04 in)		

*1	Align the matching surface of master cylinder with marking.
*2	Align the matching surface of clutch lever holder with marking.
*3	Align the matching surface of throttle case with marking.
*4	Align the “ △ ” mark on the left grip with marking.
*5	Face the cut-line of collar to the lower side.
*6	Fit the boot of throttle cable on throttle case.
*7	Position the marking in this area and set the clamp of the S-HAC switch.
*8	Match the direction of screw head and clutch lever pivot bolt head.
*9	Position the button between the clutch lever holder bolts.
*10	Face the screw thread forward.
*11	After the protrusion of engine stop switch has contacted the clutch lever holder, tighten the screw.
*12	Set the velcro of handlebar pad to backward.
*13	Apply handle grip bond.

ITEM	N·m	kgf-m	lbf-ft
Ⓐ	10	1.0	7.0
Ⓑ	3.8	0.38	2.75
Ⓒ	4.0	0.4	3.0
Ⓓ	4.0	0.4	3.0
Ⓔ	3.0	0.3	2.0

WHEEL SPOKES INSTALLATION

FRONT WHEEL

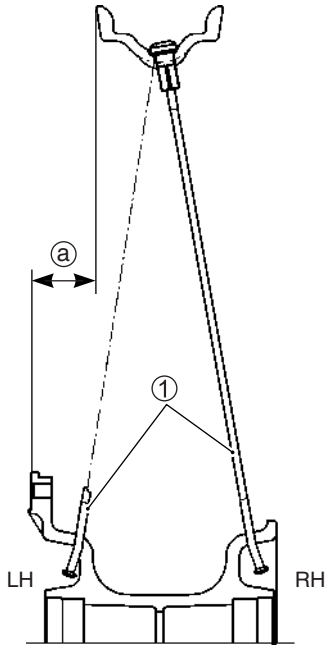

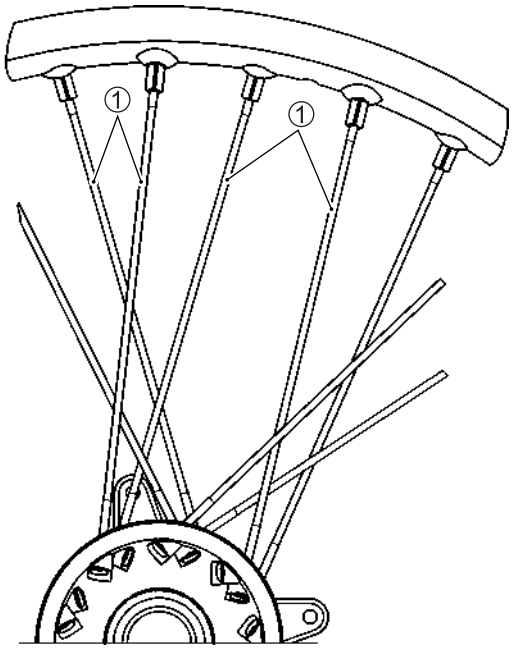

①	Spoke L: 231 mm (9.1 in)
ⓐ	28.3 mm (1.11 in)

REAR WHEEL

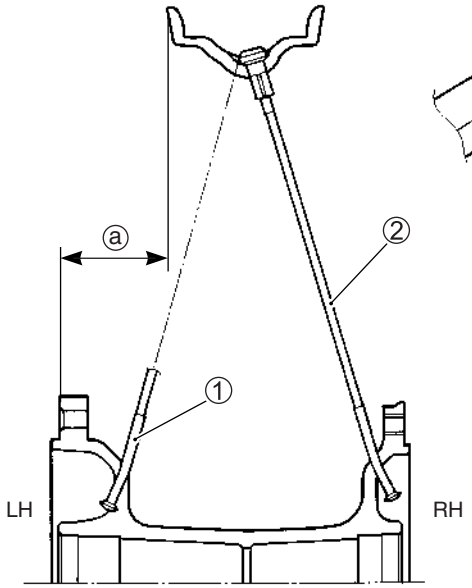

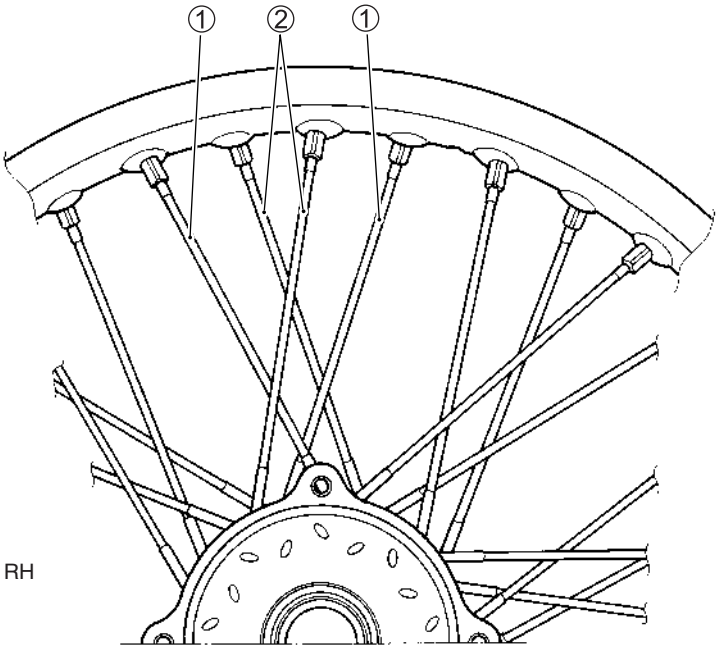

①	Spoke (Inner) L: 206.5 mm (8.13 in)
②	Spoke (Outer) L: 204.5 mm (8.05 in)
ⓐ	50.6 mm (1.99 in)

SPECIFICATIONS

DIMENSIONS AND CURB MASS

Overall length	2 170 mm (85.4 in)
Overall width	830 mm (32.7 in)
Overall height	1 270 mm (50.0 in)
Wheelbase	1 475 mm (58.1 in)
Ground clearance	345 mm (13.6 in)
Seat height	955 mm (37.6 in)
Curb mass	106 kg (234 lbs)

ENGINE

Type	Four-stroke, liquid-cooled, DOHC
Number of cylinders	1
Bore	77.0 mm (3.03 in)
Stroke	53.6 mm (2.11 in)
Displacement	249 cm^3 (15.2 cu. in)
Compression ratio	13.75 : 1
Fuel system	Fuel injection
Air cleaner	Polyurethane foam element
Starter system	Primary kick
Lubrication system	Semi-dry sump
Idle speed	2 200 ± 50 r/min

DRIVE TRAIN

Clutch	Wet multi disk
Transmission	5-speed constant mesh
Gearshift pattern	1-down, 4-up
Primary reduction ratio	3.315 (63/19)
Gear ratios, Low	2.153 (28/13)
2nd	1.764 (30/17)
3rd	1.470 (25/17)
4th	1.238 (26/21)
Top	1.090 (24/22)
Final reduction ratio	3.769 (49/13)
Drive chain	DID 520DMA4 114 links

CHASSIS

Front suspension	Inverted telescopic, air spring, oil damped
Rear suspension	Link type, coil spring, oil damped
Front suspension stroke	310 mm (12.2 in)
Rear wheel travel	310 mm (12.2 in)
Caster	29° 20’
Trail	130 mm (5.1 in)
Steering angle	45° (right & left)
Front brake	Disk brake
Rear brake	Disk brake
Front tire size	80/100-21 51M, tube type
Rear tire size	100/90-19 57M, tube type

ELECTRICAL

Ignition type	Electronic Ignition (CDI)
Ignition timing	6° B.T.D.C. at 2 200 r/min
Spark plug	NGK CR8EIB-10

CAPACITIES

Fuel tank	6.5 L (1.7/1.4 US/Imp gal)
Engine oil, oil change	850 ml (0.9/0.7 US/Imp qt)
with filter change	900 ml (1.0/0.8 US/Imp qt)
overhaul	1 000 ml (1.1/0.9 US/Imp qt)
Coolant	950 ml (1.0/0.8 US/Imp qt)

SPARE PARTS LIST

ITEM	PART NAME	PART NUMBER	Q'TY
1	PARTS SET, SPARE	19900-49H10	1
①	GASKET, MAGNETO COVER	11483-49H00	1
②	GASKET, CLUTCH COVER OUTER	11484-10H00	1
③	GASKET, EXHAUST PIPE	14181-49H00	1
④	CONNECTOR, MUF JT	14771-31G00	1
⑤	FILTER COMP, ENGINE OIL	16510-35G00	1
⑥	O-RING, WATER PUMP CASE	17431-10H00	1
⑦	D-RING, SPROCKET SPACER	27515-49H00	1
⑧	LEVER, BRAKE	57310-37F00	1
⑨	LEVER, CLUTCH	57621-35G10	1
⑩	O-RING, OIL FILTER CAP	09280-39001	1

OPTIONAL PARTS

	PART No.	NUMBER OF TEETH	COMMENTS
REAR SPROCKET	64511-29F00	47	112 L
	64511-37E00	48	114 L
	64511-36E00	50	114 L
	64511-40261	51	116 L
BATTERY LEAD WIRE	36890-28H00	—	
FRONT BRAKE DISK COVER	59231-36E30	—	—

Rear suspension spring: ☞3-18

SETTING DATA

EVENT	DATE/ LOCATION	DATE	/ /	/ /	/ /
		RACE/COURSE	/	/	/
		TEMP./HUMIDITY	/	/	/
		WEATHER			
		COURSE COUDITION			
ENGINE	SPARK PLUG				
	ECM MAP SELECT MODE				
CHASSIS	FRONT FORK	OIL LEVEL	mm	mm	mm
		COMP. ADJ. POSITION			
		RE-BOUND ADJ. POSITION LOW			
		RE-BOUND ADJ. POSITION HIGH			
		AIR PRESSURE	kPa	kPa	kPa
	REAR SUSPENSION	SPRING			
		SPRING SET LENGTH	mm	mm	mm
		SAG	mm	mm	mm
		COMP. ADJ. POSITION LOW			
		COMP. ADJ. POSITION HIGH			
		RE-BOUND ADJ. POSITION LOW			
		RE-BOUND ADJ. POSITION HIGH			
	FINAL REDUCTION RATIO		/	/	/
	FRONT TIRE	MAKER/SIZE			
		PRESSURE	kPa	kPa	kPa
	REAR TIRE	MAKER/SIZE			
		PRESSURE	kPa	kPa	kPa
COMMENT:					

*MAKE COPIES.